HERNON®
Formulating Solutions

CC131:0325_1.0

ADHESIVES, SEALANTS & APPLICATION EQUIPMENT CATALOG

121 TECH DRIVE, SANFORD FL 32771 HERNON.com 407-322-4000 / 800-527-0004

ABOUT US

Hernon Manufacturing Inc.® specializes in the production and distribution of high-performance adhesives, sealants and precision application equipment. Established in New York in 1978, Hernon has been headquartered in Sanford, Florida since 1990.

Our product portfolio includes over 5000 unique formulas of anaerobic adhesives, epoxies, structural adhesives, acrylics, threadlockers, thread sealants, retaining compounds, cyanoacrylates, UV curable adhesives/sealants and more. Our products are known for their durability, strength and ability to withstand even the most challenging environmental conditions.

In addition to manufacturing adhesives and sealants, Hernon also produces an extensive line of precision dispensing valves, powerful UV LED curing components and custom application equipment. Our on-site machine division allows us to design, build, service and integrate dispensing and/or curing equipment for any unique application or need.

Hernon's "Formulating Solutions" approach means combining the best possible adhesives and sealants with the most efficient application equipment - all from a single, reliable source. With a focus on innovation, quality and customer satisfaction, Hernon has established a global presence and currently serves customers in over 66 countries.

HERNON MANUFACTURING, INC.®

121 Tech Drive, Sanford FL 32771 Ph: +1-407-322-4000 / Toll Free: 800-527-0004 ***HERNON*.com**

Hernon Headquarters: Sanford, FL

INDEX ~ ADHESIVES

BONDING:

STRUCTURAL BONDING:

» FUSIONBOND® - Two Component Methacrylate Structural Adhesive....Pg. 5
» HASA® - Hernon® Anaerobic Structural Adhesive....Pg. 6
» ReACT® - Two Part Structural Acrylic Adhesive....Pg. 7
» TUFFBOND® - Single & Two Part Epoxies....Pg. 8-9

ELASTOMERIC BONDING:

» SUPERTACKER® - One Component, Elastomeric....Pg. 10
» SILASTOMER® - Silicone Adhesive....Pg. 11

INSTANT BONDING:

» INSTANTBOND® - Rapid Cure Cyanoacrylate....Pg. 12-13
» QUANTUM® - Rapid Cure, Surface Insensitive Cyanoacrylate....Pg. 14-15

THERMALLY CONDUCTIVE:

» DISSIPATOR® - Thermally Conductive Adhesive....Pg. 16

UV BONDING:

» ULTRABOND® - UV Curing Adhesives & Coating....Pg. 17

THREAD SEALING & THREADLOCKING:

» DRIPSTOP® - Anaerobic Pipe Sealants....Pg. 18
» SELFSEALER® - Pre-Applied Thread Sealants....Pg. 19
» NUTS N' BOLTS® - Anaerobic Threadlockers....Pg. 20-21
→THREADPASTE® - Anaerobic Threadlocking Compound....Pg. 22
» SELF LOCKER® - Pre-Applied Threadlocker....Pg. 22
» POWERSEAL® - Instant Sealing, Non-Hardening Pipe Sealant....Pg. 23

RETAINING:

» CYLINLOCK® - Anaerobic Retaining Compound For Cylindrical Parts....Pg. 24-25

GASKETING:

» GASKET REPLACER® - Anaerobic Gasket Sealing....Pg. 26
» UV FOG - UV Curable Form-On-Gasket....Pg. 27

UNIQUE APPLICATION PRODUCTS:

» BRAKE BONDER - Nitrile/Phenolic Solvent-Based Adhesive....Pg.28
» WINDSHIELD WELDER® - UV Curing Windshield Repair....Pg.28
» VOICE COIL BONDER® - Vibration & Heat Resistant Coating....Pg. 29
» WATERPROOFER 25 - Synthetic Rubber Based Protective Coating....Pg.29
» WELD SEALANT® - One Component, Anaerobic Penetrating Adhesive/Sealant....Pg.30
» METAL CEMENT - High Strength, Anaerobic; Quickly Repairs Worn Machinery Parts....Pg.30
» RUST ELIMINATOR - Chemically Transforms Rust To Inert Coating....Pg.31
» HPS (HERNON POROSITY SEALANTS) - Impregnation Resins....Pg.32
» GPS (GRAPHITE PLATE SEALANTS) - Impregnation Resins....Pg.33
» AMMUNITION SEALANTS - Dual Cure (UV/Anaerobic) Ammo Waterproofing Sealants....Pg.34-35

SPECIALTY CLEANING PRODUCTS:

» CA REMOVER - Dissolves Cured Cyanoacrylates....Pg.36
» CHEMICAL STRIPPER 30 - Chemically Cleans & Degreases....Pg.36
» CLEANER 62 - Non-aqueous, Non-CFC Industrial Cleaner....Pg.36

SUPPORT PRODUCTS:

» ACCELERATORS, ACTIVATORS, PRIMERS....Pg.37

MILITARY SPECIFICATIONS:

» MIL-SPECS, ASTM-D-5363, NSN NUMBERS....Pg.38

INDEX ~ EQUIPMENT

ONE COMPONENT DISPENSING:

» AUTOBONDER® A100D Pg.40-42
» AUTOBONDER® A150 ..... Pg.43
» AUTOBONDER® DESKTOP ROBOTS ..... Pg. 44-45
» AUTOBONDER® GANTRY Pg.46
» AUTOBONDER® 2512 ..... Pg.47
» RAMBO Pg.48
» AUTOSEALER® 2600 ..... Pg.49
» AUTOSEALER® 2650 ..... Pg.50
» ROTOCOATER Pg.51

DISPENSING VALVES:

» SURESHOT® 2200 ..... Pg.52
» SURESHOT® 3000 ..... Pg.53
» SURESHOT® 3510 ..... Pg.54
» SURESHOT® 4000 ..... Pg.55

UV LED CURING:

» ULTRACURE® 1100 ..... Pg.56
» ULTRACURE® 1000 ..... Pg.57
» ULTRACURE® 6 ..... Pg.58
» ULTRACURE® 7 ..... Pg.59
» ULTRACURE 8 ..... Pg.60
» ULTRACURE 9 ..... Pg.61

BULK FEEDING OPTIONS:

» AUTOVATOR - Bulk Feeding Elevators Pg.62
» BOWL FEEDERS Pg.63

RESERVOIRS Pg.64

DISPENSING GUNS Pg.65

DISPENSING NEEDLES & STATIC MIXERS Pg.66-67

FUSIONBOND®: Two Component Methacrylate Structural Adhesives

STRUCTURAL ADHESIVE BONDS STRONGER THAN STEEL

Hernon's **Fusionbond®** is a family of modified methacrylate structural adhesives designed for bonding a variety of substrates with minimal surface preparation. **Fusionbond®** offers the highest impact resistant bonds available today. Bondable substrates include ABS, acrylics, aluminum, brass, stainless steel, rubber, copper, ceramics, fiberglass and more.

Scan For A Fusionbond Demo Video

UNPARALLELED RESISTANCE TO IMPACT, CHEMICALS AND FATIGUE!

SIGNIFICANT FEATURES & ADVANTAGES OF FUSIONBOND®:

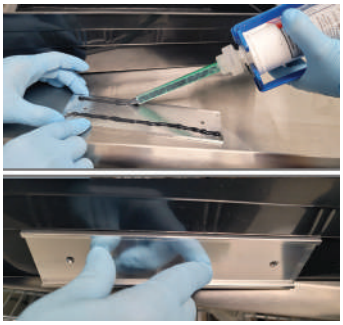

- Superior Fatigue, Impact And Environmental Resistance
- Reduced Cost Per Application Over Traditional Assembly Methods (ie: Welding, Bolts, Rivets, etc.)
- Excellent Water And Chemical Resistant Grades Available
- Distributes Stress Across The Entire Bonded Surface
- Exceptional At Bonding Dissimilar Materials
- 100% Reactive, Solventless

FUSIONBOND® TYPICAL VALUES

GRADE	MIX RATIO PARTS A&B (BY WEIGHT)	COLOR	VISCOSITY (cP)	HARDNESS SHORE D	SHEAR STRENGTH (24hrs) psi	IMPACT STRENGTH (24hrs-Joules)	WORKING LIFE (MINUTES)	FIXTURE LIFE (MINUTES)
370	1:1	Blue (A) Pale Yellow (B)	30,000-60,000 (A) 30,000-60,000 (B)	75-80	STEEL: 4000-7000 ALUMINUM: 3500-6000	STEEL ≥ 10 ALUMINUM ≥ 5	10-20	10-15
371	1:1	White (A) Off White (B)	30,000-60,000 (A) 30,000-60,000 (B)	75-80	STEEL: 4000-7000 ALUMINUM: 3500-4500	STEEL ≥ 10	15-30	15-30
374	One Part (Cure w Act56 or 15)	Clear	32,000 - 50,000	-	STEEL: 3000-5000 ALUMINUM: 2500-4500	STEEL ≥ 30	4-6	4-6
375	1:1	Blue (A) Pale Yellow (B)	30,000-60,000 (A) 30,000-60,000 (B)	75-80	STEEL: 4000-7000 ALUMINUM: 3000-4500	STEEL ≥ 12 ALUMINUM ≥ 5	5-10	5-10
3751-10	1:1	Blue (A) Pale Yellow (B)	30,000-60,000 (A) 30,000-60,000 (B)	80-90	STEEL: 4000-5000 ALUMINUM: 3000-4000	STEEL = 11 ALUMINUM > 5	10-15	5-10
3760-10	1:1	Blue (A) Black (B)	100,000-150,000 (A) 30,000-60,000 (B)	80-90	STEEL: 5000-5800 ALUMINUM: 3000-3800	STEEL = 12.6 ALUMINUM > 5	10-15	4-7
3761-25	1:1	Blue (A) Pale Yellow (B)	100,000-150,000 (A) 30,000-60,000 (B)	80-90	STEEL: 4000-4700 ALUMINUM: 3000-3700	STEEL = 17.9 ALUMINUM > 5	25-30	7-10

Fusionbond® is sold in the following sizes: 50ml, 400ml, 1 Quart, 1 Liter, 4.4lbs, 1 Gallon, 5 Gallons, 40lbs

FUSIONBOND® **LOW ODOR** GRADES TYPICAL VALUES

GRADE	MIX RATIO PARTS A&B (BY WEIGHT)	COLOR	VISCOSITY (cP)	HARDNESS SHORE D	SHEAR STRENGTH (24hrs) psi	WORKING LIFE (MINUTES)	FIXTURE LIFE (MINUTES)
3770-15	1:1	Yellow (A) Yellow (B)	30,000-60,000 (A) 30,000-60,000 (B)	85-95	STEEL: 3000-3300 ALUMINUM: 2000-2700	15-20	5-10
3780-05	1:1	Amber (A) Yellow (B)	30,000-60,000 (A) 30,000-60,000 (B)	80-90	STEEL: 3500-4500 ALUMINUM: 3000-3500	5-10	5-10

Recommended application equipment for Fusionbond®:

50ml Gun, (Manual) 50ml Gun, (Pneumatic) 400ml Gun, (Manual) 400 Gun (Pneumatic)

HASA®: Hernon Anaerobic Structural Adhesive

EXCELLENT FOR BONDING MAGNETS TO SPEAKERS AND MOTORS!

HASA adhesives are highly engineered to combine high tensile and peel strengths with excellent impact and temperature resistance for specific assembly requirements. Cured **HASA** adhesives are highly cross-linked structural thermoset plastics with excellent properties over a broad range of operational conditions.

Engineered for use on metals, glass and ceramics.

SIGNIFICANT FEATURES & ADVANTAGES OF HASA®:

- Excellent Gap Filling Abilities (Up To .040")
- Excellent Temperature Resistance
- Cure Is Achieved By The Exclusion Of Air And/Or Using A Hernon® Activator
- Easily Dispensed To Reduce Assembly Times & Costs
- Easy Clean Up. Simply Wipe Away Uncured Adhesive
- Single Component, No Mixing

HASA® : TYPICAL VALUES

GRADE	COLOR	VISCOSITY (cP)	SPECIFIC GRAVITY @ 25°C	CURING ACTIVATOR	SHEAR STRENGTH (24hrs) psi	FIXTURE LIFE (SECONDS)
716	Amber	2800-3200	1.08	Primer 50	STEEL: 1500-2500 ALUMINUM: 1000-2000	<30
718	Amber	10,000-20,000	1.10	Activator 56	STEEL: 2500-4000	30-45
722	Amber	8800-13000	1.08	Primer 50	STEEL: 1500-2500 ALUMINUM: 1000-2000	<30
66071	Amber	15,000 - 18,000	1.12	Primer 50	STEEL: 1500-2500 ALUMINUM: 1500-2500	<20

HASA® is sold in the following sizes: 25ml, 50ml, 250ml, 1 Liter, 10 Liters

Recommended application equipment for HASA®: Autobonder A100D

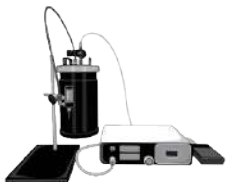

TYPICAL APPLICATIONS FOR HASA®:

- **Bonding Ferrite To Plated Metals In Electric Motors**
- **Bonding Magnets In Loudspeaker Manufacturing**
- **Bonding Jewelry Components**
- **Bonding Rearview Mirrors To Glass**
- **Bonding Ceramics**
- **Where A Fast Setting Adhesive With Structural Properties Is Needed**

ReACT®: Two-Part, No Mix Structural Acrylic Adhesives

Hernon's **ReAct®** family of structural adhesives provide excellent adhesion to a wide variety of surfaces, good gap filling properties, consistent bond strength and excellent impact, shock and temperature resistance. **ReAct®** adhesives feature the speed, versatility and incredible shear strength of acrylic adhesives and offer high peel and flexure strength in a convenient, two-component, no-mix system.

ReAct® adhesives have found wide acceptance in a variety of structural bonding applications due to their versatile performance capabilities.

SIGNIFICANT FEATURES & ADVANTAGES OF ReACT®:

- Designed For Easy Application, High-Speed Production & Maximum Time For Precise Part Alignment
- High Peel & Impact Strength For Superior Bonding Ability
- Excellent Adhesion To A Wide Variety Of Substrates (Ceramic, Glass, Metal, Plastics & More)
- Delivers Tough, Durable, Shock & Weather Resistant Bonds
- Gap Fill To 0.030" & Operating Temperatures Up To 400°F
- Many Grades Available To Meet Your Unique Needs

REACT® TYPICAL VALUES

GRADE	COLOR	VISCOSITY (cP)	SPECIFIC GRAVITY @ 25°C	CURING ACTIVATOR	SHEAR STRENGTH (N/mm2 psi)	FIXTURE TIME (MIN)
727	Off White	56000-64000	1.07	Activator 56	2500-3500	< 25 SECS
730	Light Yellow	60000-80000	1.09	Activator 56 Activator 59	2500-3500	< 3 MIN
761	Pale Yellow	80000-120000	1.01	Activator 59 Activator 63	2000-3500	< 3 MIN
766	Light Yellow	70000-90000	0.97	Activator 59 Activator 63	1500-2500	2-5 MIN
767	Off White	50000-70000	1.08	Activator 56	1500-2500	15-25 SEC
783	Light Yellow	18000-25000	0.97	Activator 59 Activator 63	2000-3500	≤ 5 MIN
784	White	40000-60000	0.97	Activator 15	3000-4000	< 4 MIN
795	Off White	56000-64000	1.07	Activator 47 Activator 56	2000-3000	< 25 SECS

ReACT® is sold in the following sizes: 10ml, 25ml, 50ml, 300ml, 1 Liter, 10 Liters, 15 Liters

Recommended application equipment for ReACT®:

Autobonder A100D

300ml Dispense Gun

TYPICAL APPLICATIONS FOR ReACT®:

- **Bonding Permanent Magnets**
- **Bonding Ferrites & Metal Strips**
- **Bonds Galvanized, Phosphate & Dichromate Surfaces**
- **Bonding Pre-Coated Sheet Metal**
- **DC Motor Assembly**

TUFFBOND®: Single & Two Part Epoxies

OUTSTANDING POTTING CAPABILITIES!

Hernon's **Tuffbond®** are a series of one and two component epoxies formulated for bonding, sealing, potting and/or coating. One component Tuffbond grades are heat cured and solidify in less than 5 minutes @ 150°C (300°F). After curing, two component grades range from being soft and flexible to extremely hard and rigid. The hardness for some two component grades can be modified by changing the mixing ratio of A and B components.

TWO-PART TUFFBOND® TYPICAL VALUES						
GRADE	**COLOR (MIXED)**	**MIXING RATIO (A/B)**	**VISCOSITY cP (MIXED)**	**WORKING LIFE (100g), MINUTES**	**HARDNESS, SHORE D**	**SHEAR STRENGTH, @ RT**
302	Off White	1:1	50000-60000	≤ 5	85-90	≥ 1500
303	Off White	1:1	90000-160000	40-60	70-80	≥ 2000
304	Black	1:1	11000-18000	4-7	80-90	2000-3500
305	Yellow	1:1	11000-17000	4-7	85-90	≥ 2000
312	Grey	1:1	80000-130000	3-4 Hours	60-75 Shore A	-
313	Light Yellow	1:1	18000-26000	40-60	70-80	≥ 2500
315	Light Yellow	1:1	8500-11500	≤ 15	80-85	≥ 2000
316	Black	100:40-110	8000-20000	2-3 Hours	70-75	≥ 2000
317	Amber	100:40-110	10000-20000	80-100	60-70	≥ 2000
318	Black	1:1	6000-16000	≤ 15	70-85	1500-2500
321	Light Yellow	1.17:1.15	10000-16000	3-4 Hours	25-35 Shore A	100-500
326	Light Yellow	100:50	50-12000	≤ 120	80-95	≥ 2000
394	Amber	One Component	44000-56000	≤ 90 sec. @ 150°C	80-85	≥ 2000
395	Light Amber	One Component	300000-360000	N/A (heat cure)	80-90	1500-3500
397	Amber	One Component	44000-56000	≤ 90 sec. @ 150°C	80-85	≥ 2000
47771	Black	1:1	60000-75000	40-60	70-80	≥ 2000
47772CT	Black	1:1	60000-70000	40-60	70-80	≥ 2000
65891	Blue	1:1	11000-18000	≤ 3 Hours	70-80	≥ 3000

Tuffbond® is sold in the following sizes: 1 ounce, 50ml, 300ml, 400ml, 1 Quart, 1 Gallon, 5 Gallons, 50 Gallon

Recommended application equipment for Tuffbond®:

50ml Gun, (Manual)

50ml Gun, (Pneumatic)

400ml Gun, (Manual)

400 Gun (Pneumatic)

SIGNIFICANT FEATURES & ADVANTAGES OF TUFFBOND® EPOXIES:

- Reduced Cost Per Application Over Traditional Assembly Methods
- Distributes Stress Across The Entire Bonded Surface
- Bonds Using Lightweight Polymers
- 100% Active – No Solvents
- Seals And Fills Gaps While Simultaneously Bonding Components; Prevents Corrosion Of Bonded Assembly
- Custom Formulas Available Such As UV Curing Epoxies

TUFFBOND® CONT'D		
GRADE	**Tg °C** (Glass Transition Temperature)	**THERMAL CONDUCTIVITY (W/mK)**
302	124	0.567
303	77	0.65
304	127	-
305	127	0.522
312	8.3	-
313	63	0.4
315	45	-
316	-	-
317	65	0.24
318	42	-
321	2	-
326	-	-
394	128	-
395	127.8	
397	128	-
47771	77	0.65
47772CT	77	-
65891	69	-

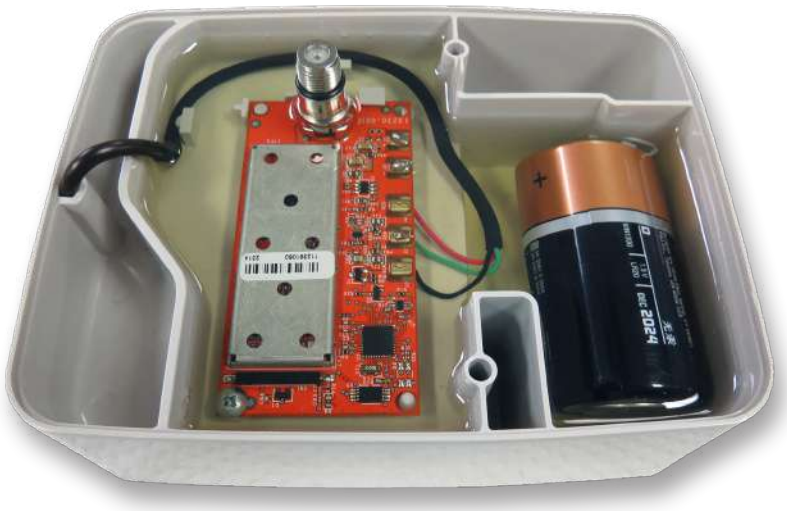

TYPICAL APPLICATIONS FOR TUFFBOND® EPOXIES:

- **Tank Lining**
- **Structural Bonding**
- **Bonding Speaker Voice Coils**
- **Encapsulating**
- **Fiber-Optic Potting**
- **Gel Coats For Chemical Resistant Flooring**
- **Bonding Ceramics**
- **Potting Electronics**

SUPERTACKER®: Elastomeric Adhesives

EXTREMELY VERSATILE, FLEXIBLE, SINGLE COMPONENT & HIGH PERFORMANCE ELASTOMERIC ADHESIVES!

Supertacker® is a family of single component, high performance elastomeric adhesives that exhibit exceptional bonding characteristics to a broad range of materials and that outperforms silicones, acrylics and rubber cement because they bond to more surfaces with greater strength and durability.

SIGNIFICANT FEATURES & ADVANTAGES OF SUPERTACKER®:

- Excellent Bonding Characteristics While Providing A Tough, Waterproof Bond That Will Not Crack Or Become Brittle
- Outperforms Silicones, Acrylics & Rubber Cements With Greater Strength, Durability & Versatility
- Excellent Environmental Resistance
- Remains Flexible In All Weather Conditions

SUPERTACKER® TYPICAL VALUES

Grade	Color	Viscosity, cP	Tensile Strength (psi) ASTM D412	Dry Time (Minutes)	Temperature Range °C (°F)	Elongation	Dielectric Strength	Hardness Shore A
351	Clear	40,000 - 60,000	3500	≤ 30	-40 to 150° (-40 to 302°)	900	400	80
357	Clear	90,000 - 150,000	3500	≤ 30	-40 to 150° (-40 to 302°)	900	400	80
67662	Red	50 - 100	≤ 2000	1 - 3 (on brass)	-40 to 150° (-40 to 302°)	-	-	-

Supertacker® is sold in the following sizes: 20 grams, 5 oz, 1 Quart, 300ml, 1 Gallon, 5 Gallons

Recommended application equipment for Supertacker®:

Autobonder® A100D

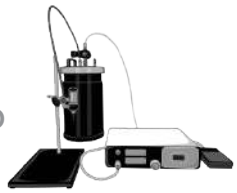

300ml Dispense Gun

TYPICAL APPLICATIONS FOR SUPERTACKER®:

- **Bonding Glass, Metal, Plastics, Wood**
- **Reinforcing Metal Seams**
- **Bonding Dust Caps To Baskets For Loudspeakers**
- **Affix Plastic Moldings And Trim**
- **Insulating Electrical Connections**
- **Sealing Tanks & Pipes**
- **Repair Torn Vinyl Mats**
- **Reinforce Metal Seams in HVAC Systems**

SILASTOMER®: Silicone Adhesives & Sealants

EXCELLENT FOR WATERPROOFING!

Silastomer® is a line of flange gasket and sealing silicones. **Silastomer®** products offer excellent moisture resistance and large gap filling abilities. Various **Silastomer®** formulas include an acetoxy cure for general-purpose usage and/or oxime cure for electrical and electronic components.

SIGNIFICANT FEATURES & ADVANTAGES OF SILASTOMER®:

- High Performance, Single Component, Silicone Gasketing Materials Which Cure Into Strong, Durable And Flexible Silicone Rubber
- 100% Silicone Compounds That Offer Excellent Resistance To Moisture, Extreme Temperatures, Vibration, Weathering Effects, UV Radiation & More
- Begins To Cure Immediately Upon Contact With Air
- All Grades Have Thixotropic Paste Viscosity
- Multiple Formulas Available To Meet Varying Needs (ie: High Temp. Resistance, Low Outgassing, etc.)

SILASTOMER® TYPICAL VALUES

Grade	Color	Tensile Strength	Temperature Range, ºF (ºC)	Tack Free Time: (¼" Bead) Min.	Hardness Shore A	Base	Elongation %	Dielectric Strength KV/mm	Shrinkage %
333	Clear	≥ 175	-70 to 400 (-56 to 204)	≤ 30	18 - 30	Clear Acetoxy Silicone	≥ 350	≥ 25	≤ 5
334	White	≥ 175	-70 to 400 (-56 to 204)	≤ 30	18 - 30	White Acetoxy Silicone	≥ 350	≥ 25	< 5
336	Black	≥ 175	-74 to 400 (-56 to 204)	≤ 30	18 - 30	Black Acetoxy Silicone	≥ 350	≥ 25	≤ 5
340	Red	≥ 175	-50 to 500 (-46 to 260)	≤ 30	18 - 30	Acetoxy	≥ 350	-	-
343	Black	≥ 175	-70 to 400 (-56 to 204)	≤ 30	18 - 30	Oxime Silicone	≥ 350	≥ 18	-

Silastomer® is sold inthe following sizes: 3oz, 6oz, 300ml, 40lbs

Recommended application equipment for Silastomer®:
300ml Dispense Gun

TYPICAL APPLICATIONS FOR SILASTOMER®:

- **Adheres To Clean Metals, Glass, Most Types Of Wood, Silicone Resin, Vulcanized Silicone Rubber, Natural And Synthetic Fibers, Ceramics, Many Plastics & Other Non-Porous Surfaces**

INSTANTBOND®: Rapid Cure Cyanoacrylate Adhesives

FAST CURING, ROOM TEMPERATURE USE

Cyanoacrylate adhesives are also commonly known as "Instant Glues" or "Super Glue" and are abbreviated as "CAs" within the adhesive industry. Common fixture times for CA's range between 2 and 50 seconds depending on the substrate. While stronger bonds are available in epoxies and other long curing adhesives, cyanoacrylates can still produce significant holding power. Common substrates that cyanoacrylate adhesives bond include metals, rubbers, most plastics and more.

MANY MIL-SPEC GRADES AVAILABLE!

SIGNIFICANT FEATURES & ADVANTAGES OF INSTANTBOND®:

- Multiple Viscosities & Curing Times To Choose From
- Special Surface Insensitive Or Low Blooming Formulas Available
- Excellent Adhesion To A Wide Variety Of Substrates
  (Metal, Electronics, Rubber, Ceramics, Vinyl, Plastics & More)
- One Drop Is Typically Sufficient For Bonding One Square Inch Of Surface Area
- Custom Formulas Available

INSTANTBOND® TYPICAL VALUES						
GRADE	COLOR	VISCOSITY cP	FIXTURE TIME (SECONDS)	SHEAR STRENGTH psi (Cured 24 hours @ 22°C)	TEMPERATURE RANGE, °C (°F)	CYANOACRYLATE TYPE
109	Clear	2-12	STEEL 25-40 ALUMINUM 10-25 POLYCARBONATE 20-40	STEEL 2900-4400 ALUMINUM 2200-3200 POLYCARBONATE 750-2900	-55 to 120 (-67 to 248)	ETHYL
110	Clear	85-200	STEEL ≤ 20 ALUMINUM ≤ 120	STEEL 2900-4400 ALUMINUM 2200-3200 POLYCARBONATE 750-2900	-55 to 120 (-67 to 248)	METHYL
112	Clear	6-16	STEEL ≤ 15 ALUMINUM 30-60 POLYCARBONATE 20-70	STEEL ≥ 2000	-50 to 80 (-58 to 176)	METHYL
119	Clear	5-15	PHENOLIC ≤ 5 POLYCARBONATE ≤ 20	STEEL 2200-3800 ALUMINUM 1750-2800 POLYCARBONATE 870-2900	-55 to 82 (-67 to 180)	ETHYL
121	Clear	2000-2800	POLYCARBONATE ≤ 45	STEEL ≥ 2000	-54 to 121 (-65 to 250)	ETHYL
123	Clear	100-120	STEEL (W/ ACCEL 72)30-50 PHENOLIC 20-40	STEEL 2600-3800 ALUMINUM 1600-2800 POLYCARBONATE > 725	-55 to 82 (-67 to 180)	ETHYL
127	Clear	15000-40000	STEEL (W/ ACCEL 72) ≤180 POLYCARBONATE ≤ 45	STEEL 2600-3800 ALUMINUM 1600-2800 POLYCARBONATE > 750	-55 to 82 (-67 to 180)	ETHYL

Instantbond® is sold in the following sizes: 1oz, 20 grams, 100 grams, 500 grams, 10kg

Recommended application equipment for Supertacker®: Autobonder® A100D

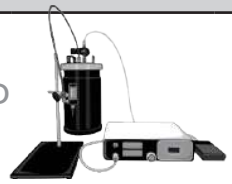

TYPICAL APPLICATIONS FOR INSTANTBOND®:

- **Speaker Components**
- **Name Plates**
- **Golf Club Parts**
- **Rubber Bumpers**
- **O-rings**
- **Wire Tacking**
- **Wiper Blades**
- **Gaskets**
- **P.C. Boards**

QUANTUM®: High Performance Cyanoacrylate Adhesives

CHOOSE FROM THREE CATEGORIES OF QUANTUM®:

Hernon's family of **Quantum®** adhesives are state-of-the-art, single component, rapid room temperature curing cyanoacrylates capable of bonding a wide variety of surfaces and substrates. **Quantum®** cyanoacrylates are offered in three distinct categories:

- **SURFACE INSENSITIVE:** Excel where other "classic" CA's fail. Some grades offer longer fixture times to allow for ample working time, varying viscosities, etc. Capable of bonding many exotic combinations of materials.
- **LOW-ODOR, LOW BLOOMING:** Specially modified formulations to eliminate vapor transmissions and adhesive residue. Great for use in poorly ventilated areas or on items which require cosmetic appeal.
- **TOUGHENED, FLEXIBLE:** Modified with plasticizers to extend the impact, tensile shear and stress resistance of CA's. This group of Quantum® adhesives are engineered for environmental resistance, high temperatures, thermal cycling, humidity and high shock applications.

SIGNIFICANT FEATURES & ADVANTAGES OF QUANTUM®:

- Highly Engineered CA's Designed To Deliver Advanced Results Where "Classic" CA's Struggle Or Fail.
- Surface Insensitive Grades Are The Best Choice For Bonding Composite, Porous &/Or Exotic Combinations Of Substrates. (Acidic, Leather, Freshly Plated & Wooden Surfaces)
- Low-Odor, Low Blooming Grades Develop Handling Strength In Seconds & Full Strength In Hours. (Use On Metals, Thermoplastics, Elastomers, Ceramics, Cork, etc.)
- Toughened, Flexible Grades Deliver Strength & Superior Toughness & Are Good Replacements For Epoxies In Many Applications.

QUANTUM® TYPICAL VALUES					
GRADE	**COLOR**	**VISCOSITY @25°C, cP**	**FIXTURE TIME (SECONDS)**	**LAP SHEAR STRENGTH**	**TEMPERATURE RANGE, °C (°F)**
150UV	Clear	1-20	**STEEL ≤ 30** **PHENOLIC ≤ 20**	**STEEL (GRIT BLASTED) ≥ 1000**	-55 to 82 (-65 to 180)
156	Clear	1600-3000	**STEEL 35-45** **ALUMINUM 20-40** **POLYCARBONATE 30-50**	**STEEL (GRIT BLASTED) ≥ 3000** **ALUMINUM (ETCHED) ≥ 2200** **POLYCARBONATE ≥ 1000**	-55 to 120 (-65 to 248)
157	Clear	400-800	**PHENOLIC ≤ 60** **RUBBER ≤ 15**	**STEEL (GRIT BLASTED) ≥ 2000**	-55 to 82 (-65 to 180)
158	Clear	80-120	**STEEL ≤ 120** **PHENOLIC ≤ 10**	**STEEL (GRIT BLASTED) ≥ 2000**	-55 to 82 (-60 to 180)
73421	Clear	80-200	**STEEL < 20** **ALUMINUM < 30** **POLYCARBONATE 5-10**	**STEEL (GRIT BLASTED) ≥ 2000** **ALUMINUM (GRIT BLASTED) ≥2000** **POLYCARBONATE ≥ 1000**	-40 to 100 (-40 to 212)

Quantum® is sold in the following sizes: 1oz, 20 grams, 50ml, 500 grams, 4.4lbs, 10kg

Recommended application equipment for Quantum®: Autobonder® A100D

TYPICAL APPLICATIONS FOR QUANTUM®:

- **Speaker Components**
- **Name Plates**
- **Golf Club Parts**
- **Gaskets**
- **Rubber Bumpers**
- **O-rings**
- **Wiper Blades**

DISSIPATOR®: Thermally Conductive Adhesives

Dissipators are thermally conductive, room temperature curing adhesives that are designed for bonding electrical components to heat sinks with controlled gaps. Through a special shimming property, **Dissipator®** insulates the component electrically while allowing thermal conductivity. This special feature produces a constant gap of 0.005" to 0.006" between components.

GRADES AVAILABLE:

- **319AB:** Two Component; Low Viscosity For Potting Applications; Thermal Shock Resistance
- **745D:** (Blue Paste) Self-Leveling / Self-Shimming; Insulates To 500 Volts; Broad Heat Sink Use.
- **746D:** (White Paste) Controlled Bond Strength To Facilitate Field Servicing Of Components; Easily Replace Parts.

SIGNIFICANT FEATURES & ADVANTAGES OF DISSIPATOR®:

- Structural Acrylics For Bonding Electrical Heat Sink Components To Circuit Boards
- Excellent Heat Dissipation For Thermally Sensitive Components
- Thermal Conductivity Is Assured & Electrical Shorting Is Prevented By The Insulating Characteristics of Hernon's Dissipator Adhesives

DISSIPATOR® TYPICAL VALUES

GRADE	COLOR	VISCOSITY @ 77°F, cP	FIXTURE TIME @ ROOM TEMP	TENSILE STRENGTH (psi, ASTM D638)	TEMP. RANGE ºC (ºF)	DIELECTRIC CONSTANT @ 1kHz	ELONGATION	COEFFICIENT OF THERMAL CONDUCTIVITY W/(m.K)
319AB	A: BLACK B: CLEAR	A: 30000-50000 B: 3-20	N/A	N/A	-55° to 240° (-65° to 464°)	4.019	N/A	1.1 - 1.4
745D	BLUE	300,000 - 800,000	< 5 MINUTES (w/ Activator 63)	491.55	-55° to 150° (-65° to 300°)	4.6	1.61	0.927
746D	WHITE	500,000 - 1,000,000	< 5 MINUTES (w/ Activator 63)	461.91	-55° to 150° (-65° to 300°)	5.29	0.86	0.92

Dissipator® is sold in the following sizes: 30cc, 300ml, 1 Liter, 10 Liters

Recommended application equipment for Dissipator®: Autobonder® A100D

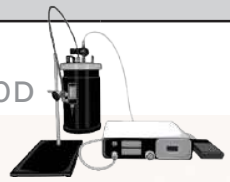

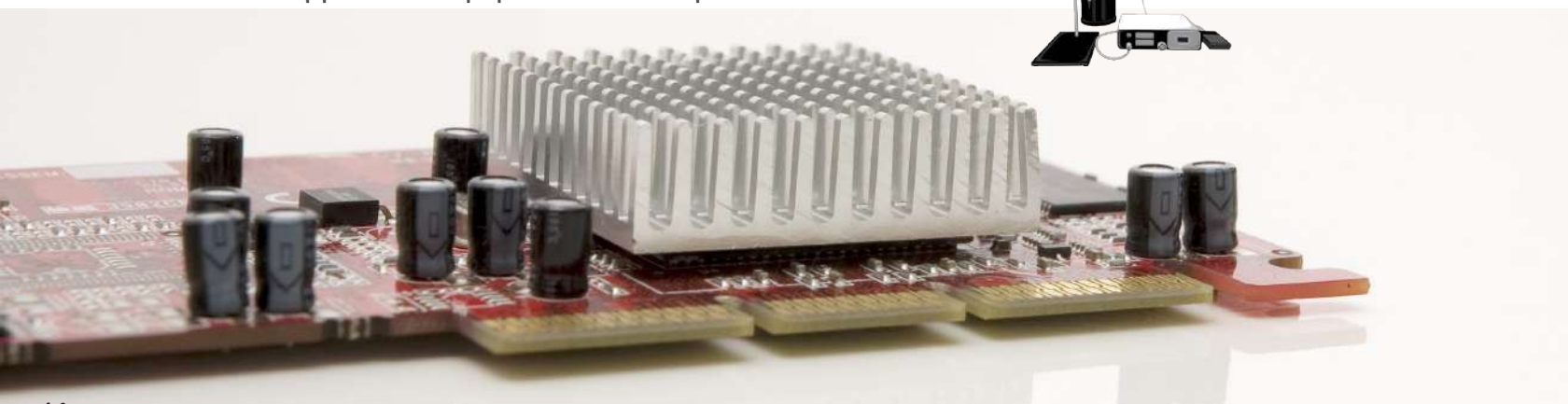

ULTRABOND®: UV Curing Adhesives

HIGH STRENGTH BONDS THAT CURE IN SECONDS UPON EXPOSURE TO UV LIGHT!

Ultrabond® adhesives and coatings are one component UV curable formulas that will cure upon exposure to UV light at specific wavelengths. Ultrabond adhesives come in three different caterogies: UV curable only, UV and heat curable and UV with primer curable.

Scan For An Ultrabond Video

ULTRABOND® TYPICAL VALUES								
Grade	**Color**	**Viscosity (cP) @ 25°C**	**Refractive Index**	**Hardness After 24 Hrs**	**Shear Strength, Glass-Glass (psi)**	**Shear Strength, Glass-Steel (psi)**	**Temp. Range °C**	**Cures Via UV, UV+Heat, UV+Primer or Anaerobic**
721	Lt Yellow	700 - 1200	1.481	40-80 shA	≥ 200	Polycarbonate ≥ 100	-55 to 120	UV
740	Clear	6,000 - 7,300	1.476	55-70 shD	≥ 500	≥ 100	-55 to 121	UV
748	Clear	1,200 - 3,000	1.475	55-65 shA / 25-35 shD	≥ 300	≥ 100	-	UV, UV+H, UV+P
750	Lt Yellow	2000-5000	1.481	40-80 shA	≥ 200	> 100	-55 to 120	UV
752	Amber	3500-5000	1.496	65-75 shA	≥ 250	≥ 450	-55 to 135	UV
758	Clear	270 - 350	1.48	75-85 shD	≥ 1000	≥ 300	-54 to 120	UV
773	Lt Yellow	15000-30000	1.47	70-80 shD	≥ 500	≥ 300	-55 to 150	UV, UV+H, UV+P
774	Red	2000-3000	1.484	75-85 shD	-	≥ 300	-	UV
786	Lt Yellow	9000-15000	1.47	55-65 shA	50-150	≥ 100	-	UV
787	Yellow	4000 - 6000	1.484	55-65 shD	N/A	N/A	-55 to 150	UV
3443	Clear	15,000 - 35,000	1.47	40-50 shD	> 300*	> 300*	-55 to 121	UV, UV+H, UV+P
3444	Clear	750 - 2000	1.485	40-60 shD	-	> 200	-55 to 121	UV, UV+H, UV+P
55711	Orange	450,000 - 550,000	N/A	-	≥ 500	100-350	-55 to 150	UV & Anaerobic

Ultrabond® is sold in the following sizes: 25ml, 30ml, 50ml, 300ml, 600ml, 1 Liter, 10 Liters, 15 Liters, 152 Liters

Recommended application equipment for Ultrabond®: Autobonder® A100D

TYPICAL APPLICATIONS FOR ULTRABOND®:

- **Glass To Glass**
- **Glass To Metal**
- **Some Plastics**
- **Potting**
- **Coating**
- **Wire Tacking**
- **Bonding Rigid & Flexible PVC**
- **Waterproofing Electronic Assemblies**

DRIPSTOP®: Anaerobic Pipe Sealants

SUPERIOR TO CONVENTIONAL PIPE DOPES & TAPES!

Dripstop® pipe sealants replace expensive, hard-to-use Teflon® tape to seal threaded components and provide an instant seal which then hardens to secure assemblies. Dripstop formulations are single-component, 100% active ingredients that cure when air is omitted between the mating surfaces of threaded pipes and fittings.

SIGNIFICANT FEATURES & ADVANTAGES OF DRIPSTOP®:

- Engineered To Provide Many Distinct Advantages Over Conventional Pipe Dopes For Plumbing, Refrigeration & Hydraulic Applications
- Dripstop Pipe Sealants Contain No Solvents & Do Not Shrink, Stretch, Split, Shred, Rot Or Wear Out Over Time
- Joints Sealed With Dripstop Offer Outstanding Vibration Resistance
- Dripstop Forms A Tough, Insoluble Seal That Will Not Leak Even If The Threads Are Damaged
- All Grades Of Dripstop Have Pressure Resistance Up To 10,000 psi On ½" Threaded Assemblies

DRIPSTOP® TYPICAL VALUES

Grade	Color	Viscosity cP	Temperature Range, ºC (ºF)	Breakaway Torque N•m (in-lbs) @RT*	Prevailing Torque N•m (in-lbs) @RT*
912	Red	4,000 - 6000	-55 to 150 (-65 to 300)	150-350	150 - 350
920	White	300,000 - 350,000	-55 to 204 (-65 to 400)	≥ 50 (@95°C)	-
921	Yellow	50,000 - 110,000	-73 to 149 (-100 to 300)	53-133	28 - 85
923	White	224,000 - 384,000	-55 to 150 (-65 to 300)	25-60	5 - 30
929	White	300,000 - 500,000	-55 to 204 (-65 to 400)	≥ 50 (@95°C)	-
940	White	800,000 - 1,280,000	-55 to 204 (-65 to 400)	10-55	5 - 25
943	Yellow	100 - 250	-55 to 150 (-65 to 300)	N/A	7 - 13
945	Brown	450 - 600	-55 to 150 (-65 to 300)	30-40	15-20
946	Brown	350 - 700	-55 to 150 (-65 to 300)	90 - 140	50 - 100
947	Brown	12,000 - 16,000	-55 to 150 (-65 to 300)	10-30	10 - 20

Dripstop® is sold in the following sizes: 10ml, 50ml, 250ml, 850ml, 1 Liter, 10 Liters, 14 Liters

*** Tested on 3/8 x 16 Steel Grade 2 Nuts and Bolts According to ISO 10964**

Recommended application equipment for Dripstop®: Autosealer® 2650

RAMBO

CLASSIFIED UL

For use in devices handling gasoline, petroleum oils, natural gas (pressure not to exceed 300 psig), butane and propane not exceeding 2 in. pipe size. 29R9.

GRADES: 920, 929, 940

DEF

GRADE: 940

NSF

Certified to NSF/ANSI/CAN 61

GRADES: 923, 940

TYPICAL APPLICATIONS FOR DRIPSTOP®:

- **Hydraulic Line Fittings**
- **Fluid Connections**
- **Pneumatic Line Fittings**
- **Steam Lines Up To 250psig**
- **Fuel Line Fittings**
- **Pipe Plugs**

SELFSEALER®: Pre-Applied Thread Sealants

TOUGH, NON-HARDENING & REUSABLE!

SelfSealer® are pre-applied, non-hardening thread sealants that provide instant seals on different pipe threads and can be used multiple times without recoating. SelfSealers are water based, non-toxic, safe and can be applied easily without special handling precautions.

SIGNIFICANT FEATURES & ADVANTAGES OF SELFSEALER®:

- The Preapplied Coating Is Tough And Will Resist Shredding And Peeling During Assembly
- Precoated Fittings Can Be Stored For Immediate Delivery And Have A Shelf Life Of Several Years
- Excellent Resistance To Vibrational Loosening And Very Effective On Non-Locking Applications
- Inhibits Corrosion Between Mating Threads
- Safe To Use With Plastics; Will Not Craze Or Attack Plastic Components

SELFSEALER® TYPICAL VALUES

GRADE	COLOR	VISCOSITY @ 77°F, cP	TORQUE STRENGTH (3/8" - 16 Steel Nut & Bolt) Breakloose Torque: (in-lb)	PRESSURE RESISTANCE (1/2" NPT)	TEMPERATURE RANGE, °C (°F)	SPECIFIC GRAVITY
604	White	4,000 - 6,000	220	10,000 psi	-55° to 150° (-65° to 300°)	1.21
615	Burnt Orange	22,000 - 32,000	287	10,000 psi	-55° to 150° (-65° to 300°)	1.26
616	White	15,000 - 25,000	150	10,000 psi	-55° to 150° (-65° to 300°)	1.24
618	Burnt Orange	4,000 - 6,000	235	10,000 psi	-55° to 150° (-65° to 300°)	1.23
622	Gray	4,000 - 10,000	270	10,000 psi	-55° to 150° (-65° to 300°)	1.11

SelfSealer® is sold in the following sizes: 2oz, 850ml, 1 Liter, 2 Liters, 10 Liters, 15 Liters, 152 Liters

Recommended application equipment for SelfSealer®: Autosealer® 2650, RAMBO

GRADES 604, 615, 616 & 618 ARE:

CLASSIFIED UL®

For use in devices handling gasoline, petroleum oils, natural gas (pressure not to exceed 300 psig), butane and propane not exceeding 2 in. pipe size. 29R9. **MH14222**

NSF®
Certified to NSF/ANSI/CAN 61

TYPICAL APPLICATIONS FOR SELFSEALER®:

- **Plumbing Parts**
- **Pressure Gauges & Sensors**
- **Adjustment Screws**
- **Pipe Fittings**
- **Overhead Fire Sprinklers**
- **Compressor Pipes**
- **Shower Heads**
- **Brake Fittings**
- **Cable Connectors**

NUTS N' BOLTS®: Anaerobic Threadlockers

LOCKS, SEALS & PREVENTS CORROSION OF THREADED ASSEMBLIES

Nuts N' Bolts® are single-component, 100% active adhesives that cure when air is omitted between threaded parts of a nut and bolt. Nuts N' Bolts® replace expensive locking methods such as lock and split washers while improving the reliability of threaded fasteners. Nuts N' Bolts® locks and seals while also preventing corrosion and vibration resistance of threaded assemblies, cures without cracking or shrinking due to solvent evaporation and are available in low, medium or high strength formulas.

SIGNIFICANT FEATURES & ADVANTAGES OF NUTS N' BOLTS®:

- Adhesive Property Options Such As Maximum Gap Filling, Cure Time, Breakaway And Prevailing Torque Plus Varying Viscosities Are Available
- Replaces Expensive Locking Methods Such As Lock And Split Washers While Improving Threaded Fastener Reliability & Helps Seal Against Leakage
- Increases Profitability (Lower Costs, Less Down Time), Reduces Maintenance (Parts Don't Vibrate Loose), Reduces Inventories (No Need For Special Fasteners) & Superior Reliability (Assembly Integrity Assured).

NUTS N' BOLTS® TYPICAL VALUES

Grade	Color	Viscosity cP	Gap Filling (Maximum)	Prevailing Torque N•m (in-lbs) ASTM D5363 3/8x24 Grade2 Cure Time 6 Hours	Prevailing Torque N•m (in-lbs) ASTM D5363 3/8x24 Grade2 Cure Time 24 Hours	Temperature Range C° (F°)	MIL-SPEC
128	Blue	75-85	0.004"	-	> 2.82 (> 25)	-54 to 85 (-65 to 185)	-
220	Green	10-25	0.004"	> 75	16.95 - 42.37 (150 - 375)	-55 to 150 (-65 to 300)	MIL-S-22473E Grade AA
223	Red	1000-2500	0.01"	> 50	11.3 - 28.25 (100 - 250)	-55 to 150 (-65 to 300)	MIL-S-22473E Grade AVV
225	Red	100-250	0.005"	> 50	11.3 - 28.25 (100 - 250)	-55 to 150 (-65 to 300)	MIL-S-22473E Grade AV
227	Red	10-25	0.004"	> 50	11.3 - 28.25 (100 - 250)	-55 to 150 (-65 to 300)	MIL-S-22473E Grade A
230	Yellow	100-200	0.005"	> 35	7.91 - 19.77 (70 - 175)	-55 to 150 (-65 to 300)	MIL-S-22473E Grade B
232	Blue	10-25	0.004"	> 20	4.52 - 11.3 (40 - 100)	-55 to 150 (-65 to 300)	MIL-S-22473E Grade C
234	Blue	1000-2000	0.01"	> 20	4.52 - 11.3 (40 - 100)	-55 to 150 (-65 to 300)	MIL-S-22473E Grade CVV
236	Red	100-250	0.005"	> 20	4.52 - 11.3 (40 - 100)	-55 to 150 (-65 to 300)	MIL-S-22473E Grade CV
237	Orange	40-80	0.005"	> 50	11.3 - 28.2 (100 - 250)	-55 to 150 (-65 to 300)	MIL-S-22473E Grade D
240	Purple	10-25	0.004"	≥ 1.1	2.3 - 5.6 (20 - 50)	-55 to 150 (-65 to 300)	MIL-S-22473E Grade E
246	Brown	100-250	0.005"	> 5	1.13 - 2.82 (10 - 25)	-55 to 150 (-65 to 300)	MIL-S-22473E Grade HV
248	Brown	10-25	0.004"	> 5	1.13 - 2.82 (10 - 25)	-55 to 150 (-65 to 300)	MIL-S-22473E Grade H

NUTS N' BOLTS® TYPICAL VALUES

Grade	Color	Viscosity cP	Gap Filling (Maximum)	Prevailing Torque N•m (in-lbs) ASTM D5363 3/8x16 Grade 5 Steel Bolts Cure Time 24 Hours	Breakaway Torque N•m (in-lbs) ASTM D5363 3/8x16 Grade 5 Steel Bolts Cure Time 24 Hours	Temperature Range C° (F°)	Fastener Size	MIL-SPEC
410	Blue	10-30	0.004"	2.3 - 11.3 (20 - 100)	2.3 - 11.3 (20 - 100)	-55 to 150 (-65 to 300)	#2 - 1/2"	MIL-S-46163A TY III Grade P
420	Purple	900-1500	0.005"	1.13 - 11.3 (10 - 100)	3.39 - 11.3 (30 - 100)	-55 to 150 (-65 to 300)	Up to 1/4"	MIL-S-46163A TY II Grade M
423	Blue	800-1600	0.01"	2.26 - 22.6 (20 - 200)	7.91 - 22.6 (70 - 200)	-55 to 150 (-65 to 300)	1/4" - 3/4"	MIL-S-46163A TY II Grade N
425	Red	1200-2400	0.01"	11.3 - 33.9 (100 - 300)	11.3 - 28.25 (100 - 250)	-55 to 150 (-65 to 300)	1/4" - 3/4"	MIL-S-46163A TY II Grade O
427	Red	400-600	0.01"	16.95 - 56.49 (150 - 500)	16.95 - 39.54 (150 - 350)	-55 to 150 (-65 to 300)	1/4" - 3/4"	MIL-S-46163A TY I Grade K
428	Red	4000-8000	0.01"	16.95 - 56.49 (150 - 500)	16.95 - 39.54 (150 - 350)	-55 to 232 (-65 to 450)	Up to 1/4"	-
429	Red	6000-8000	0.01"	16.95 - 56.49 (150 - 500)	16.95 - 39.54 (150 - 350)	-55 to 150 (-65 to 300)	Up to 1/4"	MIL-S-46163A TY I Grade L
431	Green	10-30	0.004"	16.95 - 56.49 (150 - 500)	2.26 - 16.95 (20 - 150)	-55 to 204 (-65 to 400)	#2 - 1/2"	MIL-S-46163A TY III Grade R
434	Blue	1500-3000	0.01"	3.95 - 9.94 (35 - 88)	9.04 - 16.95 (80 - 150)	-55 to 150 (-65 to 300)	1/4" - 3/4"	-
25203	Amber	9-25	0.004"	16.9 - 56.5 (150 - 500)	2.3 - 16.9 (20 - 150)	-55 to 204 (-65 to 400)	#2 - 1/2"	-

Nuts N' Bolts® is sold in the following sizes: 2oz, 20 grams, 10ml, 50ml, 250ml, 1 Liter, 10 Liters

TYPICAL BONDING APPLICATIONS FOR NUTS N' BOLTS®:

- **Locking Motor Housing Studs**
- **Adjustment Screws**
- **Sealing Joints On A/C Coils, Pipes**
- **Automotive Suspension Bolts**
- **Sealing Assemblies Where Leakage Is A Challenge**
- **Sealing Porous Welds On Storage/Fuel Tanks**

Recommended application equipment for Nuts N' Bolts®:
Autobonder A100D

THREADPASTE: High Strength Threadlocking Paste

DESIGNED FOR HEAVY DUTY APPLICATIONS; WON'T RUN, DRIP, SPILL OR MIGRATE!

ThreadPaste 432 is a single component, anaerobic threadlocking compound designed for heavy duty applications subject to operating temperatures to 450°F (232°C). This unique formula is totally non-migrating and remains where it is applied even when working overhead or in tight places.

ThreadPaste 432 delivers high strength locking and sealing on screws, nuts, bolts, studs and fittings. Excellent breakloose and prevailing torque values assure maximized resistance to vibration loosening at elevated temperatures.

THREADPASTE TYPICAL VALUES

Grade	Color	Viscosity cP	Temperature Range F°	Breakaway Torque N•m (in-lbs) ASTM D5363 3/8x16 - Grade 5 Steel Bolts Cure Time 24 Hours	Prevailing Torque N•m (in-lbs) ASTM D5363 3/8x16 - Grade 5 Steel Bolts Cure Time 24 Hours	Set Time Steel (minutes)
432	Red	700,000 - 1.2M	-65 to 450°	15.82 - 39.54 (140 - 350)	13.56 - 56.49 (120 - 500)	45-60

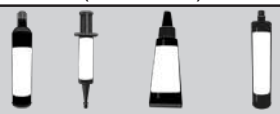

ThreadPaste is sold in the following sizes: 6oz, 30cc, 50ml, 300ml

Recommended application equipment for ThreadPaste: Autobonder® 2650

TYPICAL APPLICATIONS FOR THREADPASTE:

- **Heat Treat Furnace Equipment**
- **Rolling Mill Components, Conveyances**
- **Annealing Equipment**

SELF LOCKER®: Pre-Applied Threadlocking Compounds

STAYS DRY TO THE TOUCH!

Self Locker® is a pre-applied, micro-encapsulated anaerobic adhesive for threaded fasteners. **Self Locker®** stays dry to the touch until the shearing action of thread engagement causes the capsules to break, releasing the activator and allowing the adhesive to cure. **Self Locker®** locks and seals against vibrational loosening and fluid leakage. Precoated parts can be handled and stored dry.

SIGNIFICANT FEATURES & ADVANTAGES OF SELF LOCKER®:

- Provides Resistance To Vibrational Loosening, Fluid Leakage, Solvents & Corrosion
- Precoated Parts Have A Minimum Shelf Life Of 48 Months With No Special Handling Or Storage Requirements

SELF LOCKER TYPICAL VALUES

Grade	Color	Fix Time @ RT w/ Act. 21	Cure Time @ RT (hrs)	Temperature Range, °C (°F)	Viscosity cP	Strength* (in-lb)
523	Light Yellow	≤ 2 min.	72	-54 to 150 (-65 to 300)	25,000 - 60,000	**Breakaway Torque:** 100-200 ** **Prevailing Torque:** 150-350
525	Pale Green	≤ 2 min.	72	-54 to 150 (-65 to 300)	30,000-60,000	**Breakaway Torque:** 50-100 *** **Prevailing Torque:** 20-50

* Mixed with Activator 21 (100:6), tested after 72 hours at RT
** 523: Steel - 3/8 x 16 grade 2 nuts and grade 5 bolts
*** 525: M6 stainless steel nuts and bolts

Self Locker® is sold in the following sizes: 2oz, 440 Grams, 40 lbs

Recommended application equipment for SelfLocker: Autobonder® 2650

TYPICAL APPLICATIONS FOR SELF LOCKER®:

- **Head Bolts**
- **Truck Axle Bolts**
- **Transmission Nuts**
- **Pipe Plugs & Fittings**

POWERSEAL: Non-Hardening, Non-Curing Pipe Sealant

LUBRICATES & SEALS PIPE THREADS & O-RINGS

Powerseal 932 is a single component, non-hardening, non-curing gray paste pipe sealant which lubricates and seals threaded pipe connections and O-rings.

932 is unaffected by water, oil, ammonia, glycerin, steam, all types of gases, exhaust fumes and most hard-to-hold liquids.

SIGNIFICANT FEATURES & ADVANTAGES OF POWERSEAL:

- Withstands Extreme Temperatures & Pressures
- Will Not Shrink, Crack, Crumble Or Harden
- Makes For Easy Assembly, Disassembly & Repairs
- Prevents Galling, Corrosion & Seizing Of Metal Parts
- Seals Instantly To More Than 600psi
- Surface Insensitive & Safe To Use On Plastics & Metal
- Non-Volatile, Non-Toxic & Non-Flammable
- Non-Migrating & Will Not Run Or Drip

POWERSEAL TYPICAL VALUES

Grade	Color	Viscosity @ 25°C, cP	Instant Sealing Ability, PSI	Temperature Range, °C (°F)	Pressure Resistance, PSI
932	Gray Paste	1,300,000 - 3,600,000	Up to 600	-55 to 232 (-65 to 450)	Up to 10,000

Powerseal is sold in the following sizes: 2oz, 8 oz, 250ml, 370 Grams, 500 grams, 850 grams

TYPICAL APPLICATIONS FOR POWERSEAL®:

- **Seals & Lubricates Plastic & Metal Fittings**
- **Seals Flanges**
- **Seals Fittings Of 1" Diameter Or Smaller**
- **Lubricates O-Rings**

CYLINLOCK®: Anaerobic Sealing & Bonding For Cylindrical Components

RETAINING COMPOUNDS FOR CYLINDRICAL ASSEMBLIES

Cylinlock® anaerobic adhesives are designed for bonding and sealing cylindrical metal components. Cylinlock® adhesives are used to maximize integrity on new assemblies or repair worn shafts and bearings as well as bond and seal cylindrical assemblies. Cylinlocks cure in the absence of air between mated cylindrical surfaces and provide up to 5000 psi of shear strength.

SIGNIFICANT FEATURES & ADVANTAGES OF CYLINLOCK®:

- Retains Keys & Splines
- Augments Press Fits; Allows Use Of Slip Fits Instead Of Press &/Or Interference Fits
- Retains Bearings In Place, Preventing Spin Out
- Restores The Fit To Worn Assemblies Or Out Of Tolerance Assemblies
- Prevents Fretting & Corrosion In Assemblies
- Retains Bushings & Sleeves In Housings & On Shafts
- Eliminates Set Screws
- Easily Joins Dissimilar Materials

GRADES 824, 845, 34323 ARE:

Certified to NSF/ANSI/CAN 61

CYLINLOCK® TYPICAL VALUES					
Grade	**Color**	**Viscosity cP**	**Recommended Temperature Resistance Up To:**	**Compressive Shear Strength Steel Pin & Collar - ASTM D4562 (psi)**	**Specific Gravity**
822	Green	100-125	149°C	≥ 2000	1.07
824	Green	1500-2500	150°C	≥ 2900	1.09
827	Yellow	450-550	150°C	≥ 2000	1.09
842	Green	6000-8000	232°C	≥ 2000	1.13
843	Green	2000-3400	150°C	≥ 2500	1.09
844	Green	400-600	150°C	≥ 2000	1.09
845	Green	400-0550	N/A	≥ 2500	1.09
846	Green	1000-1500	150°C	> 2500	1.10
847	Lt. Amber	380-600	150°C	≥ 2000	1.09
34323	Green	1700-2300	150°C	≥ 2500	1.09
42633	Green	2000-3000	150°C	≥ 2500	1.10
52631	Green	6000-8000	150°C	≥ 2500	1.10

Cylinlock® is sold in the following sizes: 10ml, 50ml, 250ml, 1 Liter, 10 Liters

Recommended application equipment for Cylinlock: Autobonder® A100D

TYPICAL APPLICATIONS FOR CYLINLOCK®:

- **Bushings, Bearings, Gears & Rotors**
- **Pins, Collars, Wheels & Pulleys**
- **Heat Exchanger Tubes**
- **Holds Rotors On Electric Motor Shafts**
- **Holds Gears & Sprockets Onto Gearbox Shafts**
- **Splines, Keyways**
- **Engine Cylindrical Liners**

GASKET REPLACER: Anaerobic Gasket Sealant

SUPERIOR RELIABILITY VS. REGULAR GASKETS!

Gasket Replacers are single component, room temperature curing, gel-like anaerobic gasketing compounds formulated to provide solvent and temperature resistant gaskets. Able to seal damaged surfaces instantly, Gasket Replacers replace costly and insufficient paper or cork gaskets, provide superior metal-to-metal sealing and offer excellent chemical and vibration resistance.

SIGNIFICANT FEATURES & ADVANTAGES OF GASKET REPLACER®:

- Replace Conventional Pre-Cut Hard Or Soft Gaskets
- Single Component, Gel-Like Anaerobic Compound Provides Instant Sealing Capabilities
- Can Use On Vertical Surfaces Since It Will Not Drip Or Run
- Once Cured Between Flanges, Gasket Replacers Maintain A Thin & Flexible Seal While Providing Great Solvent & Temperature Resistance
- Excellent Chemical Resistance
- Eliminates The Need For Retorquing
- Prevents Relative Movement Of Components
- Hernon Primer 49 or 50 is recommended for all grades of Gasket Replacer

GASKET REPLACER TYPICAL VALUES								
				Cure Speed, Hours		Gap Fill, mm (in.)		
Grade	**Color**	**Viscosity cP**	**Temperature Range, ºC (ºF)**	**Unprimed**	**Primed**	**Unprimed**	**Primed**	**Specific Gravity**
906	Red	400,000 to 800,000	-53 to 149 (-65 to 300)	9 - 24	0.5 - 4	0.254 (0.010)	1.27 (0.050)	1.12
910	Purple	700,000 to 1,700,000	-55 to 150 (-65 to 300)	1 - 12	0.25 - 2	0.254 (0.010)	1.27 (0.050)	1.10
916	Red	400,000 to 1,000,000	-55 to 150 (-65 to 300)	4 - 24	0.5 - 4	0.254 (0.010)	1.27 (0.050)	1.13
CM8005	Red	2,250,000 to 4,000,000	-55 to 150 (-65 to 300)	4	48	0.254 (0.010)	1.27 (0.050)	1.11

Gasket Replacer® is sold in the following sizes: 50ml, 250ml, 300ml, 850ml, 1000Grams, 10 Liters

Recommended application equipment for Gasket Replacer: Autobonder® A100D, Autobonder® 3X Gantry Robot

UV FOG: Ultraviolet Form-On-Gasket

FORMS A SOFT, FLEXIBLE GASKET IN ANY SIZE OR SHAPE

Hernon's UV curable gasketing resin can be used as Form-In-Place gaskets in oil and coolant systems and forms a soft, flexible gasket in any size or shape. Entire gasket and O-ring inventories can now be replaced with one simple bottle. UV FOG cures within seconds of exposure to UV light and has excellent adhesion to metals, glass, ceramics and plastics.

HERNON WILL APPLY UV FOG TO YOUR SEALS FOR YOU TO TEST!

Scan For Autosealer® 4028 Video

SIGNIFICANT FEATURES & ADVANTAGES OF UV FOG:

- Replaces Conventional Gaskets & O-Rings
- Excellent Adhesion To Shaft Seals, Oil Seals, Metals, Glass, Ceramics & Plastics
- 100% Solid System Formula; No Solvents
- Cures In Seconds After Exposure To UV Light
- Seals Can Be Stored For Years At Room Temperature

HERNON® OFFERS AN EXTENSIVE LINE OF PRECISION DISPENSING, UV CURING AND CUSTOMIZED UV FOG APPLICATION EQUIPMENT!

UV FOG TYPICAL VALUES						
				Shear Strength	Shear Strength	
Grade	**Color**	**Viscosity cP**	**Hardness After 24 Hours**	**Glass To Glass (psi)**	**Glass To Steel (psi)**	**Temperature Range °F (°C)**
702	Amber	700-900	10 - 25 shA	> 100	> 100	-40 to 302 (-40 to 150)

UV FOG is sold in the following sizes: 50ml, 1 Liter, 15 Liters, 200 Liters

Recommended application equipment for UV FOG: Autosealer® 4028

TYPICAL APPLICATIONS FOR UV FOG:

- Oil Seals
- Transmission Seals
- Other Fluid Seal Systems
- Shaft Seals
- Gearbox Covers
- Engine Covers
- Oil Pans

BRAKE BONDER

FOR BONDING BRAKES, CLUTCHES & OTHER FRICTION MATERIALS TO METAL

Brake Bonder 362 is a black heat curing, nitrile-phenolic solvent-based adhesive. Cured **Brake Bonder** 362 furnishes excellent resistance to thermal shock, chemicals and water. The cured bond withstands temperatures exceeding 600°F (315°C).

SIGNIFICANT FEATURES & ADVANTAGES OF BRAKE BONDER:

- Single Component
- Excellent Resistance To High Temperatures, Chemicals & Water
- Flexible, Thermal Shock Resistant Bond
- Excellent Adhesion
- High Strength At Room Temperature And Elevated Temperatures

BRAKE BONDER TYPICAL VALUES

Grade	Color	Viscosity @ 25°C, cP	Temp. Resistance	Specific Gravity	Shear Strength @ 73°F (22°C)
362	Black Liquid	4000 - 6000	≥ 600°F (315°C)	0.94	2500-4500psi

Brake Bonder is sold in the following sizes: 2oz, 1 Quart, 1 Gallon, 5 Gallons

TYPICAL BONDING APPLICATIONS FOR BRAKE BONDER:

- **Friction Materials (Brakes, Clutches, etc.) To Metal**
- **Aluminum, Steel & Other Metals To Themselves & Each Other**

WINDSHIELD WELDER®

UV CURING WINDSHIELD REPAIR

Windshield Welder® is a single component, ultra violet curing adhesive that is specially formulated for repairing cracks in vehicle windshields. 772 is ideal for penetrating long cracks where vibration is expected.

SIGNIFICANT FEATURES & ADVANTAGES OF WINDSHIELD WELDER:

- Single Component
- UV Curable
- Excellent Vibration & Moisture Resistance
- Excellent Resistance To Yellowing Over Time

WINDSHIELD WELDER® TYPICAL VALUES

Grade	Color	Curing Time @ 25mW/cm² (365 nm)	Viscosity @ 25°C, cP	Shear Strength (Glass Blocks)	Shear Strength (Glass To Brass)
772	Clear Liquid	20-30 Seconds	15 - 25	≥ 600 psi	≥ 250 psi

Windshield Welder is sold in the following sizes: 50ml, 1 Liter

VOICE COIL BONDER

VIBRATION & HEAT RESISTANT COATING

Voice Coil Bonder® 360 is a single component, black, heat cure adhesive formulated for bonding and coating voice coil components and high temperature laminations. Cured **Voice Coil Bonder®** 360 can withstand temperatures exceeding 600°F (316°C) for today's high-powered loudspeakers.

SIGNIFICANT FEATURES & ADVANTAGES OF VOICE COIL BONDER:

- Provides A Flexible, Thermal Shock Resistant Bond
- Excellent Resistance To High Temperatures, Chemicals And Water
- Excellent Adhesion
- High Strength At Room And Elevated Temperatures

VOICE COIL BONDER® 360 TYPICAL VALUES					
Grade	Color	Viscosity @ 25°C, cP	Specific Gravity	Shear Strength (73°F - 22°C)	Shear Strength (400°F - 204°C)
360	Black Liquid	4000 - 6000	0.94	2500 - 4500	500 - 1500

Voice Coil Bonder is sold in the following sizes: 1oz, 2oz, 1 Quart, 1 Gallon, 5 Gallons, 172kg

TYPICAL BONDING APPLICATIONS FOR VOICE COIL BONDER® 360:

- **Coating Aluminum, Copper-Clad & Copper Wire Coils**
- **Coating Kapton® H, HN, HPPST, NTB, Fiberglass Composite & Nomex®**

WATERPROOFER

CURES TO A TOUGH, FLEXIBLE SEAL WITH OUTSTANDING ENVIRONMENTAL & TEMPERATURE RESISTANCE

Waterproofer 25 is a high performance synthetic rubber based protective coating for adhesive bond lines. It provides a tack-free touch in 5 minutes and cures to a tough, flexible seal with superb environmental, chemical and temperature resistance. Ideal for dressing cyanoacrylate bond lines on O-rings and gaskets.

WATERPROOFER 25 TYPICAL VALUES						
Grade	Color	Viscosity cP	Base	Temperature Range C° (F°)	Drying Time	Specific Gravity @ 25°C
25	Black	500-700	Synthetic Rubber	-40 to 150 (-40 to 302)	≤ 5 Minutes	1.09

Waterproofer is sold in the following sizes: 1.75oz, 1 Liter

WELD SEALANT: Porosity Penetrating Adhesive/Sealant

SIMPLY BRUSH ON TO APPLY!

Weld Sealant 433 is a single component anaerobic penetrating adhesive and sealant. Utilizing capillary action, 433 penetrates and seals porosities and cracks. Once confined away from air, 433 cures to a hard thermoset plastic while sealant remaining on the surface will not cure and can be easily wiped clear.

SIGNIFICANT FEATURES & ADVANTAGES OF WELD SEALANT:

- Seals Cracks As Large As 0.127mm
- Provides Fluid & Pressure Retention
- Welds, Castings & Powder Metal Parts Can Be Sealed To Their Rupture Pressure
- Helps Eliminate Corrosion & Contamination
- Temperature Range: -65 to 400°F
- Also Effective As Thread Sealant

WELD SEALANT 433 TYPICAL VALUES

Grade	Color	Viscosity cP	Breakaway Torque N•m (in-lbs) ASTM D5363 3/8x16 Grade 5 Steel Bolts Cure Time 24 Hours	Prevailing Torque N•m (in-lbs) ASTM D5363 3/8x16 Grade 5 Steel Bolts Cure Time 24 Hours	Breakaway Torque N•m (in-lbs) ASTM D5363 3/8x16 Grade 5 Plated Steel Bolts Cure Time 24 Hours	Prevailing Torque N•m (in-lbs) ASTM D5363 3/8x16 Grade 5 Plated Steel Bolts Cure Time 24 Hours
433	Amber	10-25	2.26 - 16.95 (20 - 150)	16.95 - 56.49 (150 - 500)	1.13 - 11.3 (10 - 100)	8.47 - 56.49 (75 - 500)

Weld Sealant is sold in the following sizes: 50ml, 250ml, 1 Liter, 10 Liters

METAL CEMENT

FOR QUICK REPAIRS OF WORN MACHINERY PARTS

Metal Cement 850 is a single component, high strength, high viscosity, anaerobic curing, silver gel that is designed for quick repairs of worn cylindrical parts. Once confined between parts, it develops a high strength bond with excellent chemical and temperature resistance while also providing exceptional gap filling capabilities.

Use Metal Cement 850 in new assemblies to fill gaps between parts to prevent wear, corrosion and backlash.

SIGNIFICANT FEATURES & ADVANTAGES OF METAL CEMENT:

- Repairs Worn Metal Parts (ie: Bushings, Shafts, Housings)
- Repairs Worn Key Ways & Couplings
- Assemblies Bonded With Metal Cement Often Have Double The Strength Of Press Fitted Parts
- Excellent Chemical & Temperature Resistance
- Refits Loose Screws

METAL CEMENT 850 TYPICAL VALUES

Grade	Color	Viscosity @ 25°C, cP	Temperature Range F°	Shear Strength N/mm² (psi) 24 hours @ 22°C
850	Dark Silver Gel	1,000,000 - 1,300,000	-65 to 300	≥ 2000

Metal Cement is sold in the following sizes: 50ml, 250ml

RUST ELIMINATOR

CHEMICALLY TRANSFORMS RUST INTO AN INERT COATING AND PREVENTS NEW RUST FROM FORMING

Rust Eliminator 32 is a revolutionary new product for eliminating old rust and preventing new rust on steel parts. Rust Eliminator 32 chemically changes rust to a tough, protective coating and primes the surface area for painting.

A SINGLE TREATMENT LASTS FOR YEARS!

SIGNIFICANT FEATURES & ADVANTAGES OF RUST ELIMINATOR:

- Easy To Use; Minimal Surface Preparation
- Replaces Primers For Most Industrial Finish Paints
- Works On Damp, Rusty Metals
- Non-Flammable; Low Toxicity

RUST ELIMINATOR 32 TYPICAL VALUES				
Grade	**Color**	**Viscosity @ 25°C, cP**	**Resin**	**Specific Gravity**
32	White to Black	225 - 500	Acrylic	1.23

Rust Eliminator is sold in the following sizes: 2oz, 1 Quart, 1 Gallon

TYPICAL APPLICATIONS FOR RUST ELIMINATOR® 32:

- Duct Work, Overhead Cranes/Booms
- Power Plants, Heating & Cooling Plants
- Highway Sign Posts
- Truck Trailers
- Pipes, Valves, Storage Tanks
- Guard Rails, Fences

1. Brush on rust
2. Requires occasional second coat
3. After 24 hours

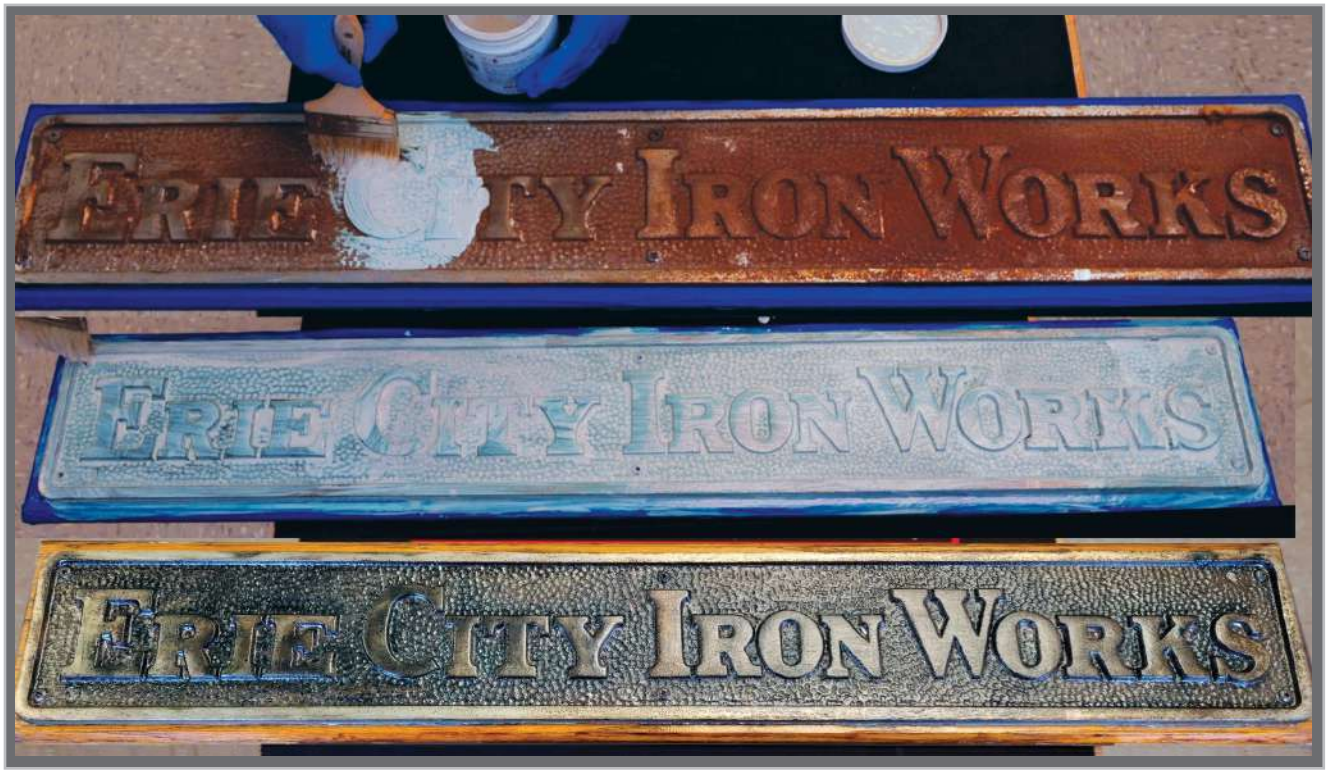

H.P.S.: HERNON POROSITY SEALANTS

THE SOLUTION TO LEAK-PROOFING PARTS!

Hernon Manufacturing's HPS **(Hernon Porosity Sealant)** resins provide the ultimate solution for sealing microscopic voids and leak paths in a wide range of materials including metals, ceramics, wood, plastics and more. Engineered for parts in need of leak-proofing, improved machinability, and enhanced durability, HPS resins are available in both room temperature and heat-curing options, ensuring easy processing and long-term storage stability.

Trusted to meet stringent customer specifications, these resins offer superior chemical resistance, elevated temperature stability, and a seamless process for treating critical components. Ideal for applications in electronic assemblies, powdered metal parts or items requiring plating or painting, HPS extends design possibilities, enhances productivity, reduces warranty expenses, and improves component durability and performance, ensuring long-lasting protection and reliability.

SIGNIFICANT FEATURES & ADVANTAGES OF H.P.S.:

- **Superior Stability:** Provides lasting leak protection in extreme environments including exposure to water, oil, etc.
- **Economical:** Fast curing coupled with efficient resin use offers exceptional cost savings and process economics.
- **Simplified Processing:** Parts can be painted or machined immediately after treatment
- **Reliability:** Hardened resins deliver superior chemical and physical resistance including elevated temperature stability and pressure sealability.

H.P.S. TYPICAL VALUES

Grade	Color	Resin Type	Viscosity @ 25°C, cP	Specific Gravity	Hardness, Shore D	MIL-SPEC
990	Lt Yellow	Dimethacrylate Blend	10-30	1.043	75-85	MIL-I-17563 Rev.C - Class 3
991R	Clear	Dimethacrylate Blend	1-10	1.03	70-85	MIL-I-17563 Rev.C - Class 1
994	Lt Yellow	Acrylate Blend	5-15	1.01	70-85	-
38374	Clear	Dimethacrylate Blend	5-11	1.03	-	-
59801	Amber	Dimethacrylate Ester	30-45	1.02	25-30	-
62671	Clear	Acrylate and Methacrylate Blend	8-15	1.03	75	-

HPS is sold in the following sizes: 4oz, 100 Grams, 1 Liter, 1 Gal, 2.5 Gal, 4 Gal, 5 Gal, 55 Gal, 222 Gal Tote

TYPICAL APPLICATIONS FOR HPS IMPREGNATION RESINS:

- Electrical Components
- Engine Blocks
- Valves, Manifolds
- Steering Gear Components
- Pneumatic Tool Castings
- Water & Fuel Pumps
- Railway & Truck Brake Parts
- Compressor Parts
- Automotive Carburetors
- Plastic Molds
- Hydraulic Pumps
- Powder Metal Parts

G.P.S.: GRAPHITE PLATE SEALANTS

THE ULTIMATE SOLUTION FOR SEALING FUEL CELL BIPOLAR PLATES!

Unlock superior performance and longevity for your fuel cell graphite plates with Hernon® **GPS 995T**, the cutting-edge impregnation sealant designed specifically for demanding applications in fuel cell technology. Engineered to surpass all existing industry standards, GPS 995T delivers unparalleled benefits that ensure optimal efficiency and durability.

SIGNIFICANT FEATURES & ADVANTAGES OF G.P.S.:

- **Single Component:** Simplifies your process with a straightforward application
- **Superior Chemical Resistance:** Provides enhanced durability by withstanding extended exposure to water & glycol
- **High Heat Endurance:** Retains structural integrity and performance even at elevated temperatures thanks to a
- **UV Traceability:** Facilitates quick and reliable inspection under UV light for enhanced quality control
- **Strong Adhesion:** Delivers effective bonding to graphite surfaces, optimizing sealing efficiency
- **Flexible Curing Options:** Can be cured using electron beams (EB) or conventional heat methods

G.P.S. TYPICAL VALUES

Grade	Color	Resin Type	Viscosity @ 25°C, cP	Specific Gravity	Hardness, Shore D	Surface Tension	Cure Mechanism	Glass Transition Temperature
995T	Lt Yellow	Acrylate Blend	10-20	1.01	75-95	27 Dynes/cm	Heat or Electron Beam	120-130°C

GPS is sold in the following sizes: 5 Gal, 55 Gal

Engine blocks are commonly impregnated with HPS to ensure durability

A graphite plate impregnated with GPS

AMMUNITION SEALANTS

EXCELLENT WATER AND ENVIRONMENTAL RESISTANCE!

For almost half a century, Hernon has developed high performance sealants for all sizes and types of ammunition - ranging from small caliber, rifle rounds, blanks, frangible ammunition, shot shells and grenades to large mortar rounds - making us a world-renowned manufacturer of ammunition sealant technology.

Hernon has revolutionized the ammunition sealing process moving from the old, messy, time consuming batch process using asphalt to a much cleaner and more efficient continuous process where high performance sealants are cured in a matter of seconds via powerful UV lights leaving the rounds ready for immediate use or packaging. In fact, our sealants are already specified on government drawings and approved for use since 1994.

In addition to many standard ammunition sealant formulas and types of application equipment, Hernon can also deliver customized sealants and dispensing/application solutions to meet any unique production need. From the largest ammunition manufacturers in the world to hobbyists and home loaders, rounds sealed by Hernon have extreme water, environmental, solvent and heat resistance to ensure peace of mind and reliability.

SIGNIFICANT FEATURES & ADVANTAGES OF HERNON AMMUNITION SEALANTS:

- Single Component, U.V. Anaerobic Sealants For Sealing Primers And Bullets
- U.V. Curable In 3-7 Seconds
- Excellent Water, Solvent, Environmental And Heat Resistance
- Variable Bullet Pull Strengths Available
- Available In Multiple Colors

Scan For Hernon's Art of Sealing Ammunition Video

GRADE	COLOR	VISCOSITY @25°C, cP	STRENGTH	Surface Tension mN/m
76040	CLEAR	5-20	LOW	28.6
76041	RED			
76060	CLEAR		MEDIUM	29.0
76061	RED			
76070	LT. YELLOW	3-20	HIGH	31.3
76081	CLEAR	8-15		32.8
76082	GREEN			
76083	BLUE			
76084	RED			
76301	RED	5-10	MEDIUM	27.0
76401	RED	5-15	LOW	29.0

BLANK AMMUNITION SEALANTS

- Medium or high viscosity, UV curable compounds for coating and sealing blank ammunition tips.
- Cures upon exposure to UV light in 4-10 seconds.
- Achieves excellent results with paper witness testing
- New Formula 53170HV is dual curing (UV and anaerobic)

GRADE	VISCOSITY	COLOR	CURING METHOD
48641	MEDIUM	PURPLE	UV
48641HV	HIGH	PURPLE	UV
48642	MEDIUM	BLACK	UV
48643	HIGH	PURPLE	UV
53162	MEDIUM	LT. YELLOW	UV
53162HV	HIGH	LT. YELLOW	UV
53170HV	HIGH	LT. YELLOW	DUAL

BULLET TIP ID

- Allows for easy vision inspection and identification of ammunition rounds
- Excellent adhesion and scratch resistant properties
- Coating is UV cured in seconds leaving the rounds ready for immediate use or packaging
- Multiple colors available

HERNON AMMUNITION SEALING APPLICATION EQUIPMENT

In addition to many standard and custom ammunition sealant formulas, Hernon also manufactures many types of standard and custom application equipment for use by the largest ammunition manufacturers in the world to hobbyists and home loaders. The Autosealer® series from Hernon range from fully automated, bulk fed machines that can seal and cure up to 240ppm (caliber dependent) to manually fed, desktop models that seal up to 20ppm.

AUTOSEALER® 5326
(240ppm)

AUTOSEALER® 5220
(20ppm)

CYANOACRYLATE REMOVER 14

Cyanoacrylate Remover 14 is designed to dissolve cured cyanoacrylate based adhesives from parts, clothing, equipment and various surfaces. **CA Remover** 14 will allow the removal of cyanoacrylate adhesives in several minutes to several hours depending on the amount of adhesive to be removed. This product can also be used for the reworking of bonded substrates.

CA REMOVER 14 TYPICAL VALUES				
Grade	**Color**	**Viscosity cP**	**Specific Gravity**	**Solvent**
14	Clear	1-2	1.05	Nitroethane Blend

CA Remover 14 is sold in the following sizes: 2 oz, 1 Gallon, 55 Gallons

CHEMICAL STRIPPER 30

Chemical Stripper 30 is a chemical liquid that works to remove pre-cut conventional gasket cements, formed-in-place chemical gaskets, carbon deposits, dried oil and grease or paint on any type of metal in minutes. (Also suitable for use on wood.) **Chemical Stripper** 30 is packaged in a convenient spray can so the liquid can penetrate and clean intricate shapes but it will not drip or run - even on vertical surfaces. This reduces excessive scraping and potential damage to surfaces.

CHEMICAL STRIPPER 30 IS IDEAL FOR REMOVING:

- Baked-on Gaskets And Gasket Cements From Any Metal Surface
- Gaskets From Aluminum Components Without Scraping Or Damaging Machine Surfaces
- High Temperature Engine Paints Prior To Repainting
- Built Up Carbon Deposits From Interior Engine/Combustion Surfaces
- Baked-on Grease And Oil Deposits
- Paint And Varnish From Wood Surfaces

Chemical Stripper 30 is sold in the following size: 18oz aerosol can

CLEANER 62

Cleaner 62 is a non-aqueous, non-CFC industrial solvent which removes oil and grease. **Cleaner** 62 is engineered to prepare contaminated surfaces to enhance the adhesion of adhesives and sealants. Recommended for final cleaning prior to assembling parts with Hernon adhesives and sealants. Compatible with metals, many plastics and elastomers.

CLEANER 62 TYPICAL VALUES					
Grade	**Color**	**Specific Gravity**	**Drying Time - No Wipe**	**Drying Time - Post Wipe w/ Dry Cloth**	**Chemical Type**
62	Clear	0.78	≤ 5 minutes	1-2 minutes	Hydrocarbon Blend

Cleaner 62 is sold in the following sizes: 1 oz, 1.75oz, 4oz, 16oz, 1 Quart, 1 Gallon

ACCELERATORS, ACTIVATORS, PRIMERS

PRODUCTS FORMULATED TO ACCELERATE CURING TIMES &/OR IMPROVE ADHESION

ACCELERATORS & ACTIVATORS						
Grade	**Color**	**Viscosity, cP**	**Base**	**Solvent**	**Drying Time**	**On-Part Life**
15	Yellow- Amber	80-200	Amine	Non-Solvent	None	2 hours
21	White	N/A	Encapsulated Benzoyl Peroxide	N/A	N/A	N/A
45	Red	10-30	Monomer	Non-Solvent	None	2 hours
47	Light Amber	10-30	Monomer	Non-Solvent	None	2 hours
48	Light Amber	Low	Amine	Isopropanol	≤ 30 seconds	≤ 1 min.
51	White	20-100	Monomer	Non-Solvent	≤ 60 seconds	2 hours
56	Light Yellow	Low	Amine	Acetone	≤ 3 min.	2 hours
56C	Amber	Low	Amine	Acetone	3 min	2 hours
58	Clear	Low	Amine	Heptane	≤ 30 seconds	24 hours
58C	Clear	Low	Amine	Heptane	30 seconds	30 min.
63	Light Yellow	Low	Amine	Heptane / Isopropanol	None	2 hours
63C	Light Yellow	Low	Amine	Heptane / Isopropanol	≤ 1 min.	2 hours

PROMOTERS & PRIMERS				
Grade	**Color**	**Viscosity, cP**	**Base**	**On-Part Life**
42	Clear	-	-	1 hour
46	Blue-Green	< 15	Monomer	≤ 1 hour
49	Yellow	Low	Amine	≤ 7 days
49C	Lt Yellow	Low	Amine	2-4 days
50	Green	Low	Amine	30 days
50C	Green	Low	Amine	30 days
57	Light Blue	< 15	Monomer	≤ 1 hour
37824	Blue	5-10	Monomer	≤ 1 hour

Accelerators, Activators, Primers and Promoters are sold in the following sizes: 1 oz, 1.75oz, 4 oz, 1 Quart, 1 Liter, 1 Gallon, 5 Gallons

MILITARY SPECIFICATIONS, ASTM-D-5363, NSN NUMBERS

MIL-SPEC COMPLIANT PRODUCTS

Many Hernon® products meet or exceed the standardized objectives set by the U.S. Department of Defense. These objectives are commonly known as military standard, "Mil Specs" or "MIL-STD."

Please visit www.hernon.com or consult Hernon Customer Service for more information about MIL-SPECS, ASTM-D-5363, related NSN numbers and/or Certificates of Conformance needs.

HERNON GRADE	MIL-SPEC & GRADE
Primer 49 – Yellow	MIL-S-22473E Grade T
Primer 50 – Green	MIL-S-46163A Grade F
Accelerator 48	MIL-A-46050C TY IIA and IIIA
Instantbond 109	MIL-A-46050C TY II CL 1
Instantbond 110	MIL-A-46050C TY I CL 2
Instantbond 112	MIL-A-46050C TY I CL 1
Instantbond 113	MIL-A-46050C TY II CL 1
Instantbond 117	MIL-A-46050C TY II CL 3
Instantbond 119	MIL-A-46050C TY II CL 1
Instantbond 121	MIL-A-46050C TY II CL 3
Instantbond 123	MIL-A-46050C TY II CL 2
Instantbond 127	MIL-A-46050C TY II CL 5
Nuts N Bolts 220	MIL-S-22473E Grade AA
Nuts N Bolts 223	MIL-S-22473E Grade AVV
Nuts N Bolts 225	MIL-S-22473E Grade AV
Nuts N Bolts 227	MIL-S-22473E Grade A
Nuts N Bolts 230	MIL-S-22473E Grade B
Nuts N Bolts 232	MIL-S-22473E Grade C
Nuts N Bolts 234	MIL-S-22473E Grade CVV
Nuts N Bolts 236	MIL-S-22473E Grade CV
Nuts N Bolts 237	MIL-S-22473E Grade D
Nuts N Bolts 240	MIL-S-22473E Grade E
Nuts N Bolts 246	MIL-S-22473E Grade HV
Nuts N Bolts 248	MIL-S-22473E Grade H

HERNON GRADE	MIL-SPEC & GRADE
Nuts N Bolts 420	MIL-S-46163A TY II Grade M
Nuts N Bolts 423	MIL-S-46163A TY II Grade N
Nuts N Bolts 425	MIL-S-46163A TY II Grade O
Nuts N Bolts 427	MIL-S-46163A TY I Grade K
Nuts N Bolts 429	MIL-S-46163A TY I Grade L
Nuts N Bolts 431	MIL-S-46163A TY III Grade R
Dripstop 943	MIL-S-22473E Grade JV
Cylinlock 822	MIL-R-46082B TYPE I
Cylinlock 824	MIL-R-46082B TYPE III
Cylinlock 826	MIL-R-46082B TYPE II
Cylinlock 840	MIL-R-46082B TYPE I
HPS 990	MIL-I-17563C Class 3
HPS 991	MIL-I-17563C Class 1
Silastomer 333	MIL-A-46106B Type I
Silastomer 334	MIL-A-46106B Type I
Silastomer 336	MIL-A-46106B Type I
Silastomer 340	MIL-A-46106B Type I
Silastomer 343	MIL-A-46106B Type I

HERNON®
EQUIPMENT

» PRECISION DISPENSING VALVES «

» POWERFUL UV LED CURING LIGHTS «

» TURNKEY APPLICATION SYSTEMS «

» CUSTOM APPLICATION SOLUTIONS «

AUTOBONDER® A100-D

The **Autobonder® A100-D** is a high precision controller capable of handling a wide range of fluids, adhesives and sealants. The A-100D features a (0-100psi) pressure regulator and can deliver controlled beads, accurate dots and/or large volume fillings at the touch of a button.

Part #110020194

Scan For An A100D Demo Video

Features:

- Manual, Timed and Cycle dispense modes
- Easy to read and program digital time, pressure and equipment settings
- Stores up to 40 programs
- Vacuum suck back feature; positive shut off eliminates waste

System Accessories Includes:

- Foot switch & finger switch
- Power supply
- Interconnect tube with universal fitting
- Syringe & syringe adapter
- Syringe stand
- Needle sample kit

AUTOBONDER® A100-D	
Dimensions (W x D x H)	10.24" (260mm) W x 6.29" (160mm) Deep x 2.83" (72mm) H
Weight	3.31 lbs (1.5 kg)
Power Supply	Input 110~230 V (auto)
Max Input & Output Air Pressure	Air Input: 70-100psi (5 - 7 bar) Air Output: 1-70psi (0.1 - 5 bar) 2.78" (70.6mm)
Dispense Time	0.01 - 99.99 seconds
Diagram (Front / Side / Rear)	FRONT VIEW 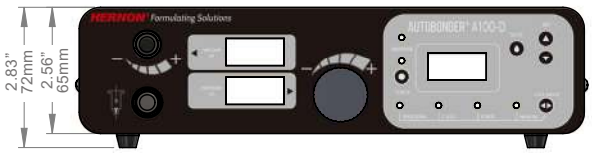 REAR VIEW TOP VIEW 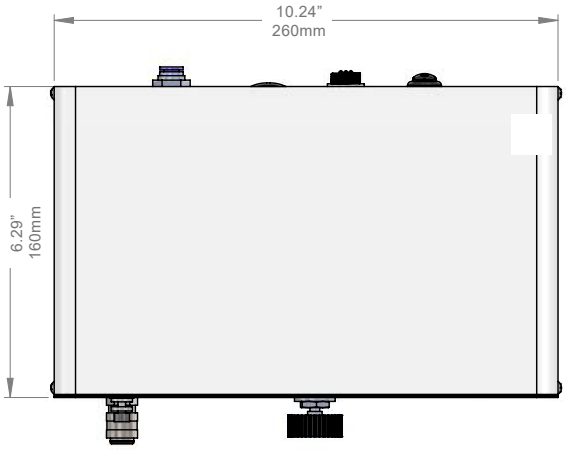

A100-D: SYRINGE DISPENSING SYSTEM

Syringe Dispensing System Includes:

- A100-D controller
- Power supply
- Interconnect tubing & connectors
- Foot switch
- Finger switch
- Syringe adapter
- 30cc dispensing syringe (Qty: 2 pcs)
- Needle sample kit
- Syringe stand

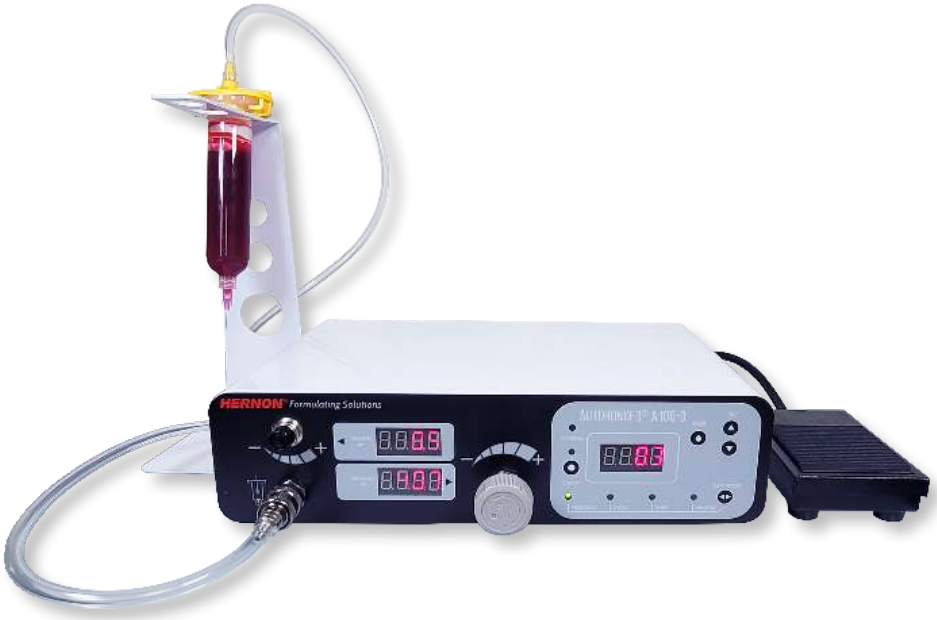

A100-D: RESERVOIR DISPENSING SYSTEM

Reservoir Dispensing System Includes:

- A100-D controller
- Power supply
- Interconnect tubing & connectors
- Foot switch
- Finger switch
- Needle sample kit
- Reservoir (SOLD SEPARATELY)
- Valve (SOLD SEPARATELY)
- Valve stand (SOLD SEPARATELY)

AUTOBONDER® A100-D COMPONENTS REFERENCE GUIDE

- CUSTOM KIT OPTIONS
  - **(A)** STAND OPTIONS
    - SURESHOT® 4000 AND/OR 2200 **PT# 110-040**
  - **(B)** DISPENSE TUBING OPTIONS
    - BLACK TUBING 1/8" NYLON **PT# 101-035**
    - BLACK TUBING 1/4" NYLON **PT# 101-036**
    - BLACK TUBING 1/4" TEFLON® **PT# 101-038**
    - CLEAR TUBING 1/4" TEFLON® **PT# 101-033**
    - CLEAR TUBING 3/8" TEFLON® **PT# 101-034**
  - **(C)** DISPENSE VALVE CONNECTION FITTINGS
    - 1/8" NPT - 1/4" TUBE KYNAR® STG **PT# 101-043**
    - 1/8" NPT - 1/4" TUBE KYNAR® 90º **PT# 101-046**
    - 1/4" NPT - 1/4" TUBE KYNAR® 90º **PT# 101-047**
    - 1/4" NPT - 3/8" TUBE KYNAR® 90º **PT# 101-045**
  - **(D)** DISPENSE VALVE PNEUMATIC FITTINGS
    - SURESHOT® 2200 **PT# 101020363**
      90° 10-32 NPT TO 6MM PUSH TO CONNECT
    - SURESHOT® 4000 **PT# 101020043**
      1/8" NPT TO 6MM PUSH TO CONNECT
  - **(E)** SURESHOT® OPTIONS
    - **SURESHOT® 4000**
      - ALUMINUM MANI; ALUMINUM PISTON, STRAIGHT: **PT# 110-005**
      - ALUMINUM MANI; ALUMINUM PISTON, 90°: **PT# 110-067**
      - ALUMINUM MANI; TEFLON® PISTON, STRAIGHT: **PT# 110-006**
      - ALUMINUM MANI; TEFLON® PISTON, 90°: **PT# 110-007**
    - VALVE
      - VALVE 3 **PT# 103-005**
      - VALVE 4 **PT# 103-006**
      - NO STANDARD STAND FOR VALVES 3 & 4
    - **SURESHOT® 2200**
      - DELRIN® MANI; TEFLON® DIA., STRAIGHT PORT: **PT# 110-000**
      - DELRIN® MANI; TEFLON® DIA., 90° PORT: **PT# 110-001**
      - TEFLON® MANI; TEFLON® DIA., 90° PORT: **PT# 110-002**
      - TEFLON® MANI; TEFLON® DIA., STRAIGHT PORT: **PT# 110-003**
  - **(F)** RESERVOIR R125 OPTIONS **PT# 110-100**
    - PRECISION REG. & GAUGE (0-100 PSI) **PT# 110-091**
    - PRECISION REG. & GAUGE (0-30 PSI) **PT# 110-090**
    - STD. REG. & GAUGE (0-100 PSI) **PT# 110-081**
    - STD. REG. & GAUGE (0-30 PSI) **PT# 110-080**
      - ⅛" COMPRESSION TUBE FITTING **PT# 101-055**
      - ¼" COMPRESSION TUBE FITTING **PT# 101-052**
      - ⅜" COMPRESSION TUBE FITTING **PT# 101-053**
      - SENSOR OPTIONS:
        - NPN **PT# 110-095**
        - PNP **PT# 110-096**
  - **(G)** **AUTOBONDER® A SERIES**
    - AB A100-D **PT# 110020194**

AUTOBONDER® A150D

The **Autobonder® Gantry 600** is a robotic dispensing system that can be easily integrated with in-line industrial automation processes. All axes are above the work area making them ideal for large dispensing applications.

Part #110020285

Features:

- AC servo motors with ball screw design
- Available in 3 or 4 axis models
- Repeatability of 0.01mm
- High rigid frame structure
- Open access design for in-line operation
- Dots, lines, arcs and 3D dispensing paths available
- Hand-held teach pendant is included for simple and intuitive programming functions.
- Ideal for dispensing adhesives, cyanoacrylates, silicones, RTV, anaerobic resins, epoxies, UV curable materials and much more

AUTOBONDER® A150-D	
Dimensions (W x D x H)	4.72" x 2.83" x 3.94" (120mm x 72mm x 100mm)
Weight	1.1lbs (0.5kg)
Operating Temp.	32° - 104°F (0° - 40°C)
Voltage	110 ~ 230V (Auto)
Time Range	.01 to 99.99 seconds
Relative Humidity	20-90% (No condensation)
Diagram	

AUTOBONDER® DESKTOP SERIES

AUTOBONDER® 3X

Scan For An Autobonder 3X Demo Video

Features:

- Dots, lines, arcs, etc. and 3D dispensing paths available.
- 100 programs, 4000 points per program.
- A hand-held teach pendant is provided for simple and intuitive programming functions.
- Apply adhesives, cyanoacrylates, silicone, RTV, anaerobic resins, epoxies, UV cure formulations and many other liquids.
- Windows SRE software is available for CAD file input (optional).

Model (Part #)	AB-3X200 (#10020256)	AB-3X300 (#110020257)	AB-3X400 (#110020258)	AB-3X500 (110020259)
Working Area X/Y/Z (mm)	200/200/50	300/300/100	400/400/100	500/500/100
Load Table Y-Axis / Z-Axis	5kg / 3kg	10kg / 5kg		
Maximum Speed XY / Z (mm/sec)	0.1 ~ 500 / 300	0.1 ~ 600 / 300		
Resolution	0.001 mm / Axis			
Repeatability	+/- 0.01 mm / Axis			
Data Memory Capacity	100 Programs, 4000 Points / Program			
Display	TFT			
Drive System / Stepping Motor	Micro Stepping Motor			
Motion Control	PTP & CP			
Linear / Circular Interpolation	3 Axis			
Teaching Method	Teach Pendant			
I/O Signals	8 Inputs / 8 Outputs			
Power Supply	100 ~ 230 VAC, 200W	100 ~ 230 VAC, 320W		
Working Temperature	0 - 40°C			
Relative Humidity (no condensation)	20 - 90% (no condensation)			
Dimensions (WxDxH mm)	382 x 374 x 485	482 x 499 x 593	585 x 599 x 597	685 x 698 x 593
Body Weight	23kg	30kg	40kg	45kg

AUTOBONDER® 3X-S (SCREW DISPENSING)

Features:

- X/Y/Z axis ball screw increases robot stability & repeatability
- Servo motor driven, accurate movement.
- Dots, lines, arcs and 3D dispensing paths available.
- A handheld teach pendant is provided for simple and intuitive programming functions.
- Windows SRE software is available for CAD file input (optional).

View of Screw

Model (Part #)	AB-3X320S (#110020261)	AB-3X420S (#110020262)
Working Area X / Y / Z (mm)	320 / 350 / 100	420 / 350 / 100
Load Table Y-Axis / Z-Axis	10kg / 5kg	
Maximum Speed XY / Z (mm/sec)	0.1 ~ 600 / 300	
Resolution	0.001 mm / Axis	
Repeatability	+/- 0.01 mm / Axis	
Data Memory Capacity	4000 steps per program; unlimited programs	
Display	TFT	
Drive System / Stepping Motor	DC servo motor	
Motion Control	PTP & CP	
Linear / Circular Interpolation	3 Axis	
Teaching Method	Teach Pendant	
I/O Signals	8 Inputs / 8 Outputs	
Power Supply	100 ~ 230 VAC, 320W	
Working Temperature	0 - 40°C	
Relative Humidity (no condensation)	20 - 90% (no condensation)	
Dimensions (WxDxH mm)	482 x 499 x 593	585 x 599 x 597
Robot Weight	30kg	40kg

AUTOBONDER® DESKTOP SERIES (cont'd)

AUTOBONDER® 4X SERIES (4 AXIS DISPENSING)

Features:

- Can be used as a stand-alone machine without an external computer.
- Points, lines, arcs and other 3D dispensing paths.
- Perfect dispensing with repeatability of 0.02mm.
- 100 sets of programs, each with 4000 lines of memory space.
- Graphical teaching box, easy to learn and easy to operate.
- Suitable for all kinds of adhesives: UV, silicones, epoxies, cyanoacrylates, heat-dissipating and more.
- SRE software on PC can be purchased for CAD input.

Model (Part #)	AB-4X300 (#110020263)	AB-4X400 (#110020264)	AB-4X500 (#110020265)
Working Area X/Y/Z (mm)	300/300/100/360°	400/400/100/360°	500/500/100/360°
Maximum Load Y-Axis / Z-Axis	6kg / 2kg		
Maximum Speed XY / Z (mm/sec)	0.1 ~ 500/300		
Repeatability	+/- 0.02 mm / Axis		
Data Memory Capacity	100 Programs, 4000 Points / Program		
Display	TFT LCD		
Drive System / Stepping Motor	Micro Stepping Precision Motor		
Motion Control	PTP & CP		
Linear / Circular Interpolation	4 Axis		
Teaching Method	Teach Box		
I/O Signals	8 Inputs / 8 Outputs		
Power Supply	Full voltage AC110 ~ 220V / 300W		
Working Temperature	0 - 40°C		
Working Environment Humidity (no condensation)	20 - 90% (no condensation)		
Dimensions (WxDxH mm)	485 x 505 x 797	585 x 605 x 797	685 x 698 x 797
Body Weight	37kg	47kg	55kg

AUTOBONDER® 3X5002Y SERIES (3 AXIS, 2Y)

Features:

- 2Y axis can be set to different dispensing paths.
- X/Y/Z axix ball screw increases stability and repeatability.
- A handheld teaching pendant is provided for simple & intuitive programming functions.
- Dispensing area 500 x 500 x 500 x 100mm.
- Dots, lines, arcs, etc. and 3D dispensing paths available.
- Apply adhesives, cyanoacrylates, silicone, RTV, anaerobic resins, epoxies, UV curable formulas and many more fluids.
- SRE software on PC can be purchased for CAD input.

Model (Part #)	AB-3X5002Y (#110020260)
Working Area X / Y1 / Y2 /Z (mm)	500 / 500 / 500 / 100
Maximum Load Y-Axis / Z-Axis	5kg / 3kg
Maximum Speed XY / Z (mm/sec)	0.1 ~ 600/300
Resolution	0.001 mm / Axis
Repeatability	+/- 0.01 mm / Axis
Data Memory Capacity	100 Programs, 4000 Points / Program
Display	TFT
Drive System / Stepping Motor	Micro Stepping Motor
Motion Control	PTP & CP
Linear / Circular Interpolation	3 Axis / 2Y
Teaching Method	Teach Pendant
I/O Signals	8 Inputs / 8 Outputs
Power Supply	100 ~ 230VAC, 320W
Working Temperature	0 - 40°C
Relative Humidity (no condensation)	20 - 90% (no condensation)
Dimensions (WxDxH mm)	685 x 715 x 670
Body Weight	70kg

AUTOBONDER® GANTRY 600

The **Autobonder® Gantry 600** is a robotic dispensing system that can be easily integrated with in-line industrial automation processes. All axes are above the work area making them ideal for large dispensing applications.

Features:

- AC servo motors with ball screw design
- Available in 3 or 4 axis models
- Repeatability of 0.01mm
- High rigid frame structure
- Open access design for in-line operation
- Dots, lines, arcs and 3D dispensing paths available
- Hand-held teach pendant is included for simple and intuitive programming functions.
- Ideal for dispensing adhesives, cyanoacrylates, silicones, RTV, anaerobic resins, epoxies, UV curable materials and much more

AUTOBONDER® GANTRY 600	
Dimensions: Inches (mm)	47.2" x 43.3" x 25.6" (1200 x 1100 x 650mm)
Working Range (X/Y/Z) Inches (mm)	23.6" / 23.6" / 7.87" (600 / 600 / 200mm)
Load Z-Axis: Pounds (Kg)	22.04 lbs (10kg)
X & Y / Z (mm/sec)	0.1 ~ 500 / 500
Resolution	0.01mm / Axis
Repetitive Positioning Accuracy	± 0.01mm / Axis
Program Capacity	100 Programs, 4000 points each
Program Display	Teach Pendant LCD
Motor System	X/Y/Z Axis AC Servo Motor
Driver System	X/Y/Z Axis Ball Screw
Control Method	PTP & CP
Interpolation Function	3 Axis (3D Path)
Programming Method	Teach Pendant
I/O Signals Port	8 Inputs / 8 Outputs
External Control Interface	RS232
Power Supply	Input VAC 220V; 600W
Working Temperature F° (C°)	32° - 104°F (0 - 40°C)
Working Relative Humidity	20-90% No Condensation
Robot Weight: Pounds (Kg)	176.3 lbs (80Kg)

AUTOBONDER® 2512

The **Autobonder® 2512** is a control unit for applying a wide variety of sealants or adhesives to components along a circular path, using any number of Sureshot® valves depending on the material being dispensed. The machine allows control through an included HMI PLC and can be triggered through manual control with a footswitch and/or PLC start button.

The two spindles, located in the top surface of the machine, are designed to rotate speaker components and apply a bead of adhesive along a desired edge.

Part #110-137

Features:
- Independently operating dual turntables for dispensing
- Consistent application on circular paths
- Multiple timing functions & ranges
- Tooling sold separately

System Includes:
- 2512 control unit
- Two reservoirs
- Two Sureshot® valves (SS2200 or SS4000)
- Foot switch
- Tubing
- Needle kit

AUTOBONDER® 2512	
Dimensions (WxDxH)	20" (508mm) W x 18.7" (474.9mm) Deep x 20.75" (527.1mm) H
Weight	60 lb (28 kg)
Power Requirements	90-220VAC
Internal Power Supply	24V and 48V
Air	Minimum 70psi; Max 100psi; ¼" NPT
Diagram (Front / Side / Rear)	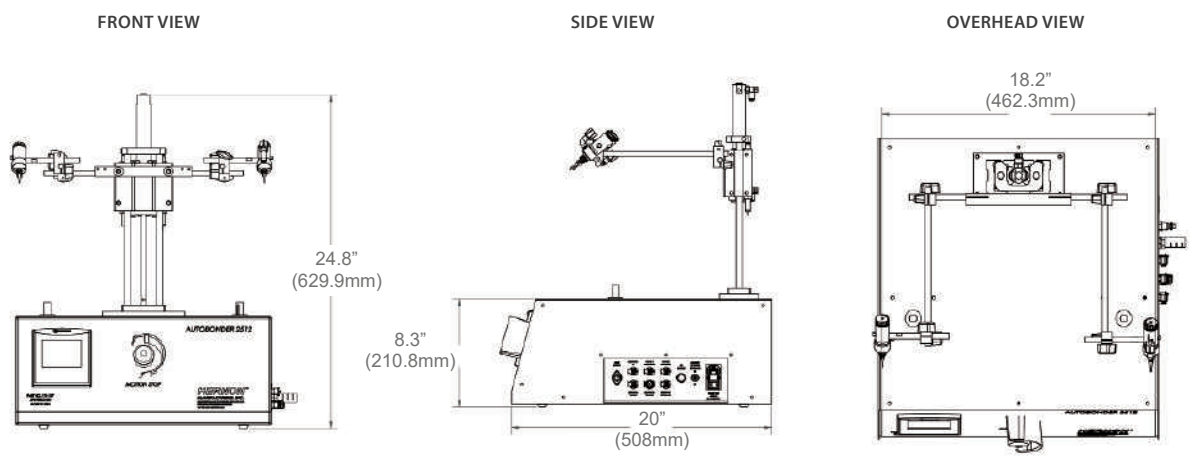

RAMBO 2010

Hernon's **Rambo 2010** is designed to deliver high viscosity materials such as Gasket Replacer® or Dripstop® at high volume for manual or robotic applications. Utilizing pressures of up to 350 PSI the Rambo 2010 uses a pneumatic ram to press the material up and out of the reservoir.

Part #110020000

Features:
- Adjustable shop air pressure from 0-100 psi
- Dispenses high viscosity materials
- Easy refill with 1,000 ml. Poly-Pak bags
- Adjustable PSI to create dispense pressures up to 350 psi
- Smooth dispensing with a one-way air purge that releases excess gas
- All-in-one system with versatile dispense valve options

System Includes:
- Rambo 2010 Unit

Available Options:
- **Dispense Valves**

» SS3000
#110-061: 1/4" Piston, AL Body
#110-062: 3/8" Piston, AL Body
#110-063: 1/4" Piston, SS Body
#110-064: 3/8" Piston, SS Body

» SS4000
#110-005: Straight, AL Piston
#110-006: Straight, Teflon Piston
#110-007: 90 Degree, Teflon Piston
#110-067: 90 Degree, AL Piston

- **Dispense Lines**

#101020232: 36" braided output hose
#101020233: 48" braided output hose

RAMBO 2010

Dimensions (WxDxH)	6.66" (169.2mm) W x 7.5" (190.5mm) Deep x 28.16" (715.3mm) H
Weight	55 lb (24.9 kg)
Max Input Air Pressure	100psi
Operating Pressure	75 - 100 psi

Diagram (Front / Side / Rear)

FRONT VIEW

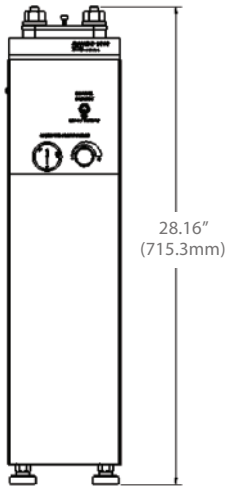

OVERHEAD VIEW

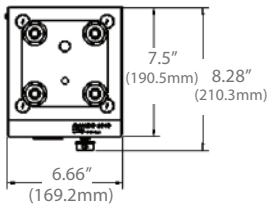

REPLACEMENT PARTS

PART #	DESCRIPTION	QTY
105020107	Bleeder O-Ring	10
105020011	Reservoir Cap O-Ring	5
101020232	36" Output Hose	1
101020233	48" Output Hose	1
101-088	Tubing, Clippard Blue ¼	6'
114020143	⅝" - 11 SS Flange Nut	1
38732	Hernon Green Flushing Compound	2

AUTOSEALER® 2600

The **Autosealer® 2600** dispensing system is a portable, touch-activated, all-pneumatic applicator for dispensing high-viscosity Hernon® products onto threaded pipe fittings and nipples. A quick-turn turret offers cavities for 1/16", 1/8", 1/4", 3/8", 1/2", 3/4" and 1" male pipe threads. Once manually actuated, the piston pump expresses a metered amount of material. When the fitting is removed, the pump resets, ready for another cycle. The Autosealer® 2600 can be fed directly from a 50ml or 250ml tube or an optional 850 ml cartridge.

Part #110020191

Features:
- Applies thread sealants behind leading threads
- Adjustable turret to match fitting sizes from 1/16" to 1"
- Pneumatic, touch activated dispense cycle
- Dispenses 50ml, 250ml tubes and from 850ml cartridges
- Volume knob adjustment

AUTOSEALER® 2600	
Dimensions (WxHxD)	13.4"(340.36 mm) W x 6.2" (157.48 mm) Deep x 4.6" (116.84 mm) H
Weight	9 lbs (4.08 kg)
Input & Operating Pressures	Max Input Air Pressure: 100psi; Operating Pressure: 60psi
Diagram	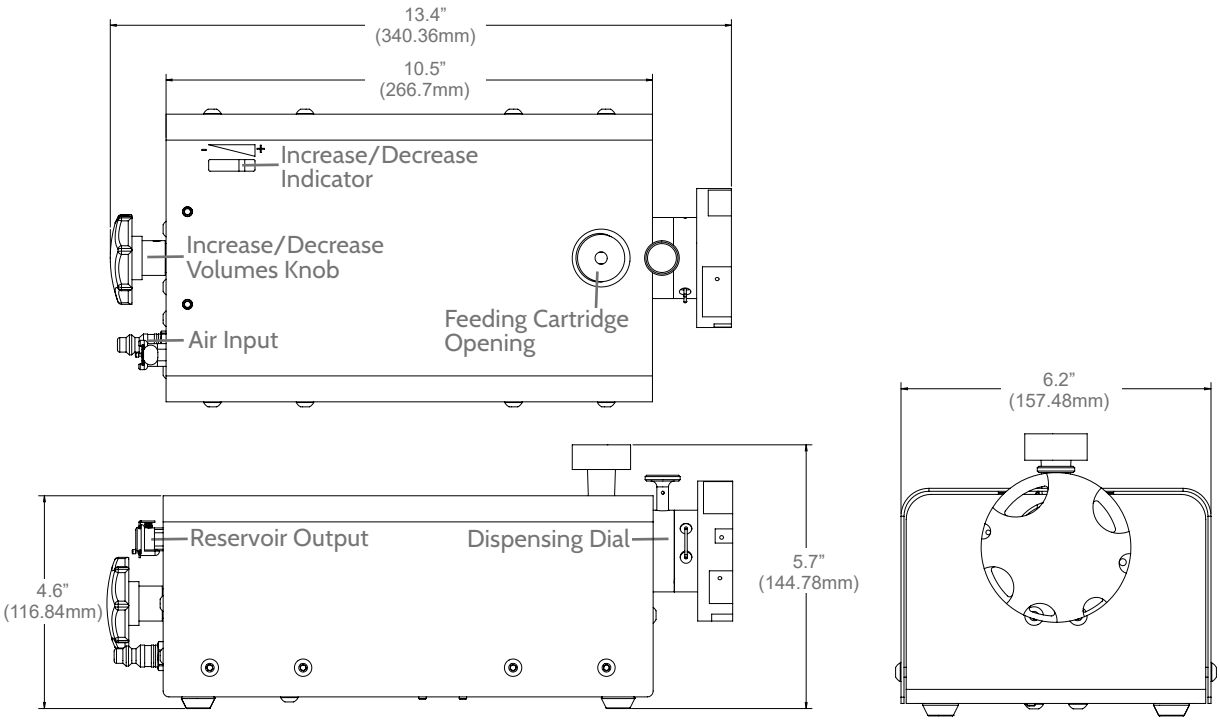

AUTOSEALER® 2650

The **Autosealer® 2650** is a control unit for applying sealant to pipe thread nipples, using either the Sureshot® 2200 or 4000 dispensing valves. The Autosealer® 2650 can be triggered manually with a footswitch and/or PLC/HMI color touchscreen button.

Scan For An Autosealer 2650 Video

Part #'s:

- » **110020169:** SS4000 & 850ml Canister w/ 0-100 PSI Regulator
- » **110020165:** SS2200 & R125 w/ 0-30 PSI Regulator
- » **110020166:** SS2200 & R125 w/ 0-100 PSI Regulator
- » **110020167:** SS4000 & R125 w/ 0-30 PSI Regulator
- » **110020168*:** SS4000 & R125 w/ 0-100 PSI Regulator

(*Most commonly used)

Features:

- Produce more parts in less time
- Adaptable for different fluid viscosities
- Seals threaded pipe sizes 1/8" to 2"
- Improve product quality with precision dispensing

System Includes:

- 2650 control unit
- Tooling sold separately
- Sureshot® valve (SS2200 or SS4000)
- Foot switch
- Tubing

AUTOSEALER® 2650			
Dimensions (WxDxH)	16.5" (419.4mm) W x 14.38" (365.25mm) D x 14.3" (363.2mm) H		
Weight	40 lb (18.14 kg)		
Power	110 or 220 VAC (This system is auto switching)		
Internal Power Supply	24V		
Air Power Requirements (Dry filtered air)	Min = 70psi; Max = 100psi. 1/4" NPT		
Cooling	Filtered, Dual-Fan arrangement		
Supply Options	R125 1 Gal. Pressure Reservoir (**Pt# 110-100**)	R200 10 Gal. Pressure Reservoir (**Pt#110-102**)	850ml Cartridge Retainer (**Pt# 110-056**)
Dispensing Valve Options	Sureshot® 2200 (low to medium viscosity fluids): 4 options	Sureshot® 4000 (medium to high viscosity fluids): 4 options	
Diagram (Front, Bottom)	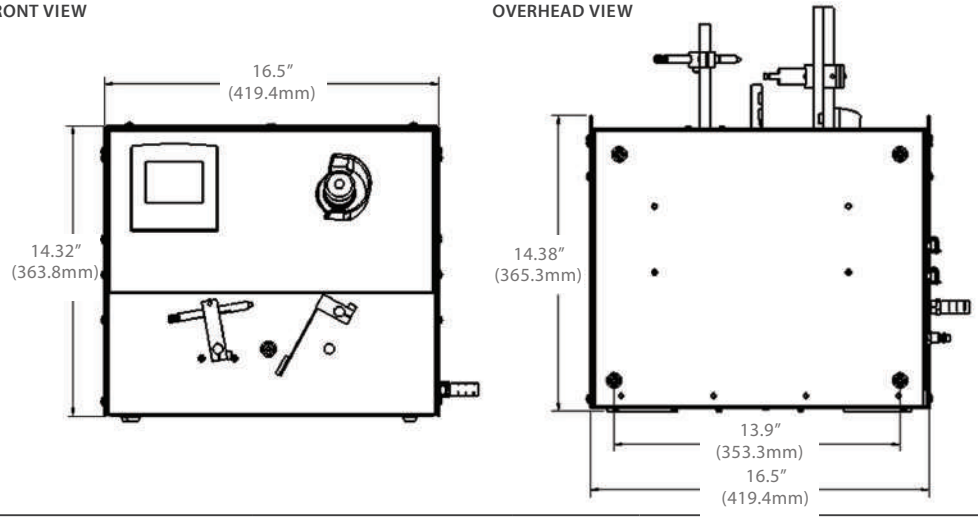		

ROTOCOATER® 500; ROTOCOATER® 750

ROTOCOATER® 500

Designed to apply materials to recessed openings, the RotoCoater® evenly coats the inner surface of bores and other interior spaces. The unit can apply a controlled bead as well. The customizable dispenser can be used as part of a stock dispensing system for specific applications or part of turnkey dispensing solutions for multiple bores.

The **RotoCoater® 500** uses a small, precision air motor to spin a dispersion cup which is inserted into a recess. The Sureshot® 2200 valve then delivers a metered amount of material to the cup that evenly coats the inner surface recess.

RotoCoater® 500
Style A

RotoCoater® 500
Style B

Features & Specs:
- Weight (approximate): 8.37oz (237.3 grams)
- Motor air pressure (max): 100psi
- Sureshot® dispensing valve (max) 70psi
- Spinner diameter from .250" to .500"
- Tip length: 2.013" to 3.325" (based on style)
- Dispensing microtip or needle (A: 14-24 gauge; B: 14-23 gauge)

System Includes:
- Air motor
- 1/8" dia. spindle collet
- Sureshot® dispensing valve
- Dispersion cup
- Motor mounting bracket
- Needle Kit

ROTOCOATER® 750

The **RotoCoater® 750** uses a bigger and more powerful air motor than the 500 to spina larger dispersion cup which is inserted into a recessed area. The attached Sureshot® valve then delivers a metered amount of material to the cup that evenly coats the inner surface of the bore. The dispersion cup prevents overspray and applies a uniform layer of material.

The RotoCoater® can be used with a wide-range of adhesives, sealants, oil or just about any liquid material. Each RotoCoater® 750 is customized for each application. Complete systems can be designed that apply materials to multiple bores in one cycle simultaneously.

RotoCoater® 750
Style A

RotoCoater® 750
Style B

RotoCoater® 750
Style C

Features & Specs:
- Weight (approximate): 8.37oz (237.3 grams)
- Motor air pressure (max): 100psi
- Sureshot® dispensing valve (max) 70psi
- Spinner diameter from .750" to 2.0"
- Cup diameter from .310" to 2.0"
- Tip length: 3.010" to 5.010" (based on style)
- Dispensing microtip or needle (A: 14-24 gauge)

System Includes:
- Air motor
- 1/4" dia. spindle collet
- Sureshot® dispensing valve
- Dispersion cup
- Motor mounting bracket
- Needle Kit

SURESHOT® 2200

Sureshot® 2200 dispensing valves accurately controls the application of most low to medium viscosity fluids. The unique sealless design incorporates an inert polymer diaphragm that isolates the actuator from the valve. Valve open time can be as short as 15 milliseconds. The adjustable open/close stroke 0.025 to 0.76mm (0.001" to 0.030") means very fast response and positive shutoff. Sureshot® 2200 dispensing valves are used for dispensing adhesives, sealants, ultraviolet curing polymers, anaerobics, cyanoacrylates, lubricants, etc. An ultraviolet light blocking Delrin® valve manifold with optional UV kit # 110-030 on the Sureshot® 2200 provides consistent trouble free dispensing of U.V. curing polymers.

Sureshot® 2200
w/ optional Sidekick

Standard Assembled Models Part #'s:

» **110-001** - Delrin® manifold / Teflon® diaphragm, 90° dispense port
» **110-002** - Teflon® manifold / Teflon® diaphragm, 90° dispense port
» **110-000** - Delrin® manifold / Teflon® diaphragm, straight dispense port
» **110-003** - Teflon® manifold / Teflon® diaphragm, straight dispense port

Features & Specs:

- Compact weight and size
- Adjustable fluid flow control
- Positive shutoff, no seals
- Easy cleaning
- FDA-Compliant wetted parts
- Cycle rate exceeds 500/minute

Optional Sidekick Actuator:

» **110020121** - Sidekick: A simple valve actuator designed to be used with SS2200 valves to provide fast actuation speed and small shot size with better consistency/repeatability.

SURESHOT® 2200	
Dimensions	2.63" (66.8mm) L x 1.06" (27mm) ø
Weight	2.68oz (76 grams)
Air Input	70psi
Fluid Pressure	70 psi
Diagram / Dimensions	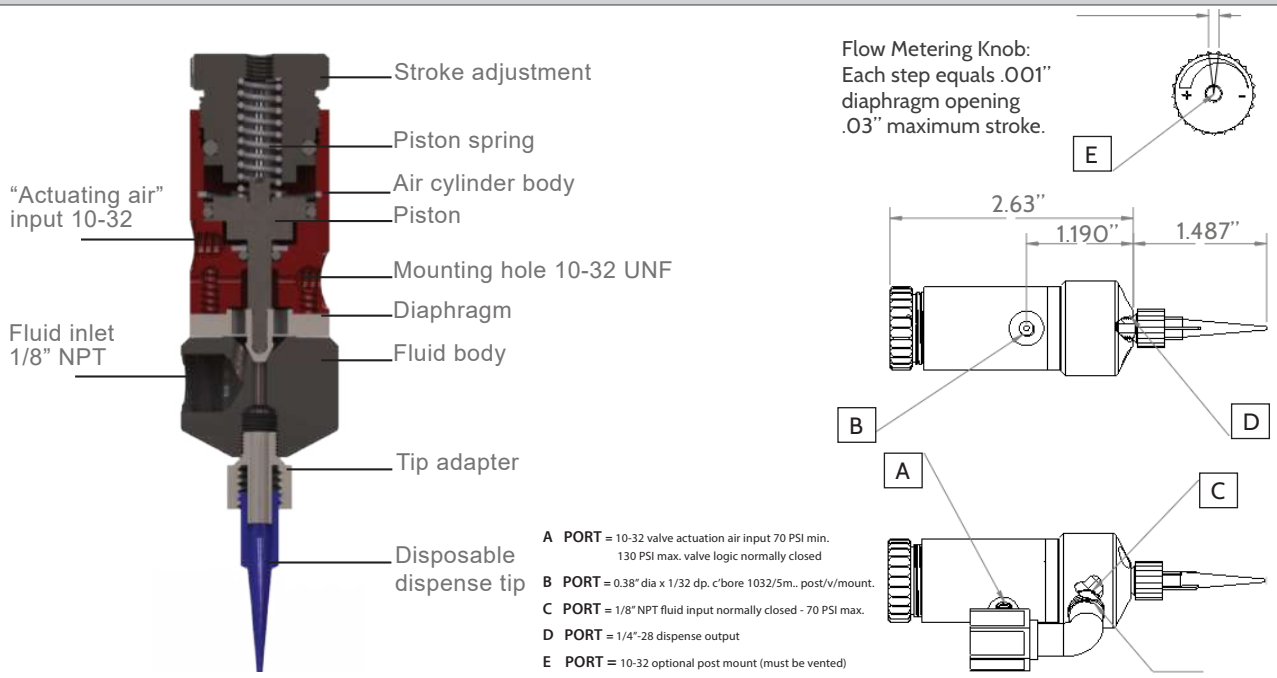

SURESHOT® 3000

The **Sureshot® 3000** dispensing valve accurately controls the application of low and medium viscosity fluids. With multiple models to choose from, the ceramic polymer wetted piston/liner is used for dispensing solvents, cyanoacrylates, anaerobics and fluxes under 100 PSI. With positive shutoff and no seals, this valve can be relied on to support extended manufacturing runs without leaking or breaking down. Tip selection is critical to achieving optimum valve performance. The Sureshot® 3000 valve supports a Luer Lock adapter and a kit with multiple sizes of dispensing tips to help identify the best match for any specific application.

Standard Assembled Models Part #'s:

- » **110-061** - Aluminum pump body piston 0.250
- » **110-062** - Aluminum pump body piston 0.375 (See Fig. 2)
- » **110-063** - Stainless steel pump body piston 0.25
- » **110-064** - Stainless steel pump body piston 0.375 (See Fig. 1)

Optional Model Part Numbers For Smaller Spaces:

- » **110-127** - 3/8" aluminum piston (thin) body
- » **110-123** - 3/8" stainless steel piston (thin) body

Features & Specs:

- Compact design
- Easy mounting
- Precision volumetric dispensing
- Quick and easy maintenance
- Diverse chemical compatibility
- Robust construction

Dispense Tips:

Tip selection is critical to achieve optimum valve performance. SS3000 series valves offer the option of a Luer-lock adapter and one dispensing tip kit for the fluid control. The kit (PT# 110-033) includes smooth-flow tapered micro-tips in sizes from 14 to 25 gauge, and precision stainless steel tips in sizes from 14 to 30 gauge.

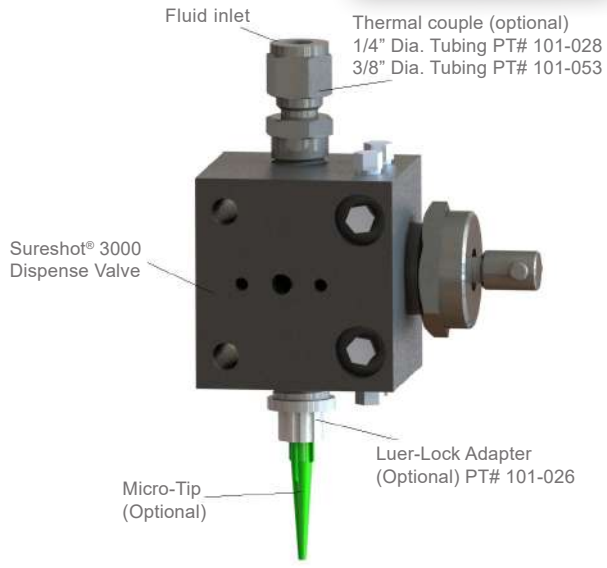

SURESHOT® 3000

Dimensions	2.0" (50.8mm) W x 1.75" H (44.45mm) x 2.46" (62.53mm) L
Weight	Stainless Steel Body: 23.2 oz (657.7 grams); Aluminum Body: 11.6 oz (328.9 grams)
Piston Sizes	¼" or ⅜"
Diagram / Dimensions	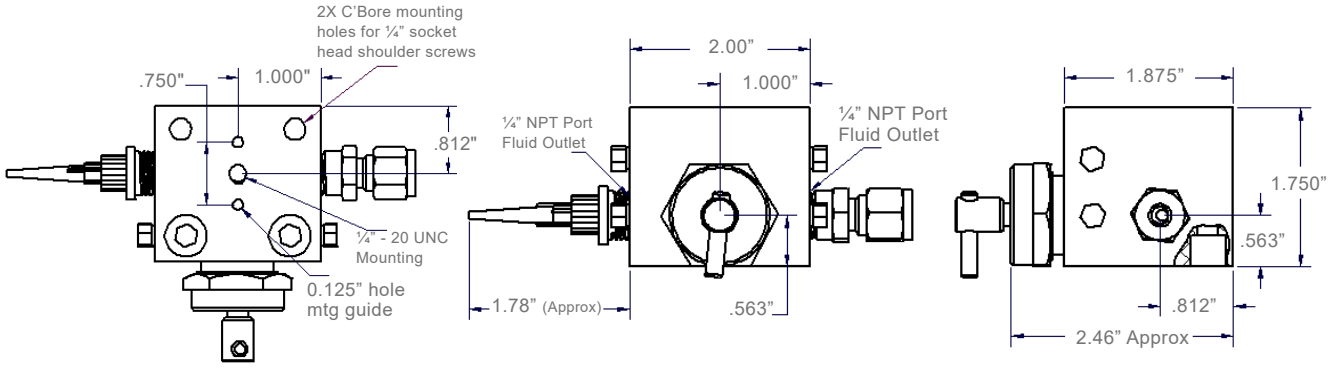

SURESHOT® 3510

The **Sureshot® 3510** semi-automatic dispensing valve accurately controls non-contact dispensing of low viscosity fluids and is the primary choice for precision dispensing of Hernon® ammunition sealants. The Sureshot® 3510 has a user friendly design allowing easy replacement of clogged or damaged tips. When properly maintained, the Sureshot® 3510 has proven to be extremely durable and reliable in high-volume, demanding, 24/7 production environments.

Part #110020049

Spare Part #'s:
» 105020367 - Needle
» 106021620 - Needle Guard

Close up of needle housing

Features:
- Compact weight and size
- Adjustable fluid flow control
- Positive shutoff, no seals
- Easy cleaning & repairs
- Non-contact "jet" dispensing
- Cycle rate > 500/minute

SURESHOT® 3510	
Dimensions	1.405" (35.68 mm) L x 0.25" (6.35 mm) W x 1.8" (45.72 mm)
Weight	1.44 oz (41 grams)
Orifice	0.01" included (other orifice sizes available)
Max Air Dispense Pressure	100 psi
Fluid Pressure	Up to 500 psi
Diagram / Dimensions	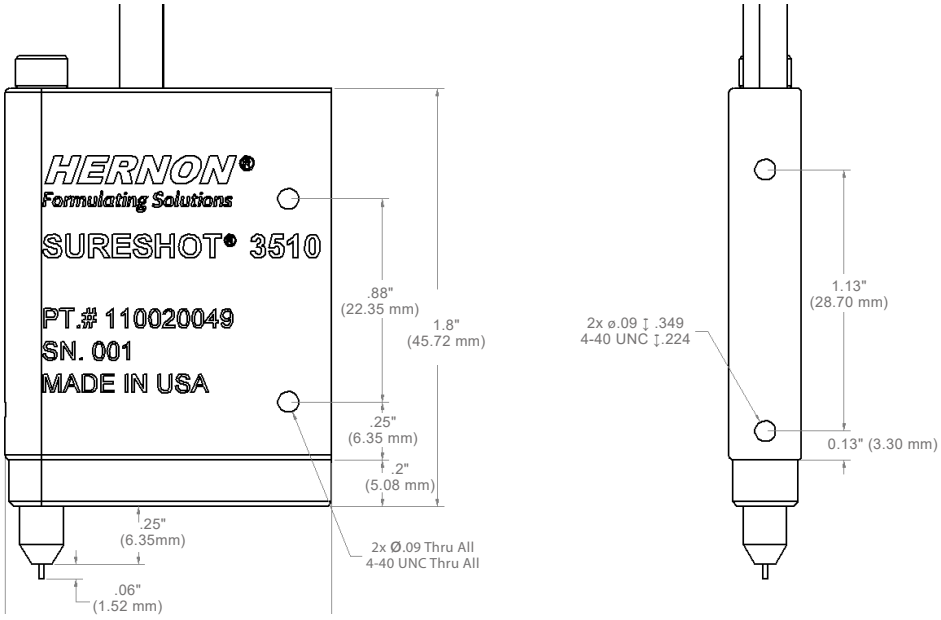

SURESHOT® 4000

The **Sureshot® 4000** dispensing valve accurately controls the application of most medium to high viscosity fluids. The Sureshot® 4000 utilizes an aluminum piston for high pressure dispensing with a maximum of 500 PSI. (A Teflon® piston for anaerobic gasket replacers is also available.) This system ensures minimal waste of material with a positive shutoff and snuff back stop response. The Sureshot® 4000 is available in either straight or 90° models and utilize Hernon's disposable dispensing tips. The compact size and low weight allows for greater placement and system design options when compared to heavier and more bulky valve systems.

Standard Assembled Model Part #'s:

» **110-005** - Aluminum manifold / aluminum piston, straight port
» **110-067** - Aluminum manifold / aluminum piston, 90° port
» **110-006** - Aluminum manifold / Teflon® piston, straight port
» **110-007** - Aluminum manifold / Teflon® piston, 90° port

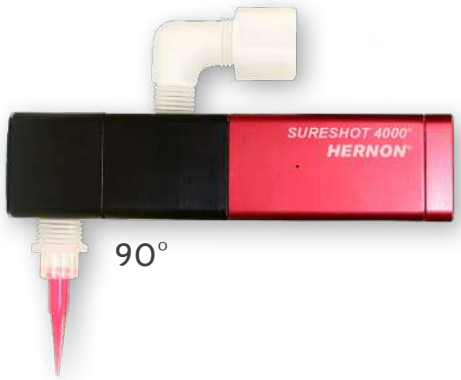

90°

Straight

Features & Specs:

- Compact weight and size
- Low maintenance design
- Easy cleaning
- Positive shutoff
- Snuff back

SURESHOT® 4000

Dimensions	4.875" (123.8 mm) L x 1.187" (30.2 mm) W x 1.187" (30.2 mm) D
Weight	9.59 oz (272 grams)
Fluid Pressure	Up to 500 psi
Diagram / Dimensions	

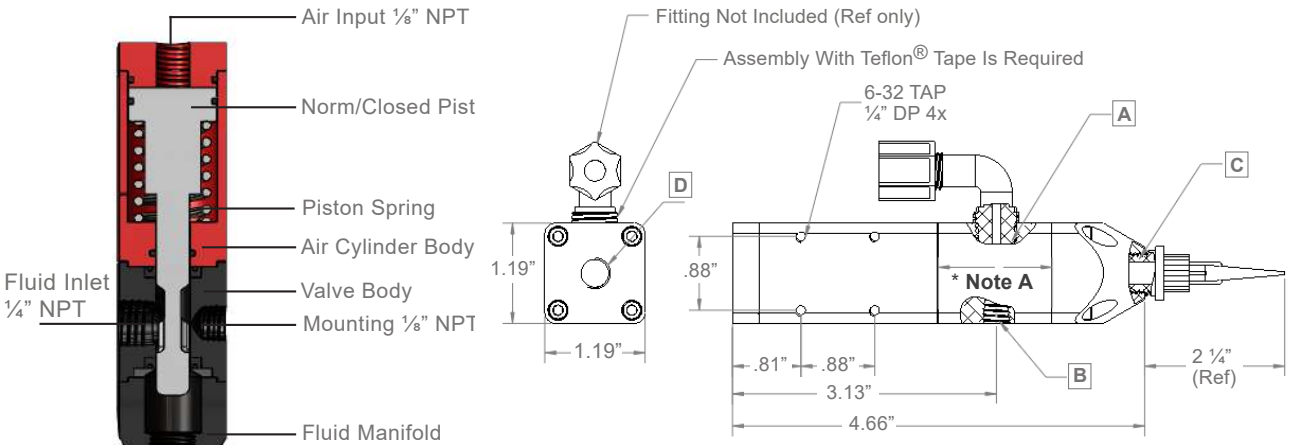

* **Note A**: Manifold can be rotated in 90º increments in relation to the mounting holes

Ports:

A: ¼" NPT Fluid/Adhesive Input 1000 PSI Max
B: ⅛" NPT Mounting Only
C: ¼" NPT Needle Dispensing Output
D: ⅛" NPT Air Input Valve Initiation 70-100 PSI

ULTRACURE® 1100

The **Ultracure® 1100** is a benchtop, high output UV LED curing conveyor designed to quickly and completely cure UV adhesives and sealants.

Part #110020070

Features:
- Benchtop conveyor UV curing unit
- Variable intensity control
- Color touchscreen control
- Conveyor belt direction reversible
- Easily adjustable UV LED intensity focus
- Specially designed Teflon® coated Kevlar® belt
- Integrated heat exchanger for UV LED units
- Integrated exhaust blower/filter assists with cooling
- Heavy duty all aluminum construction

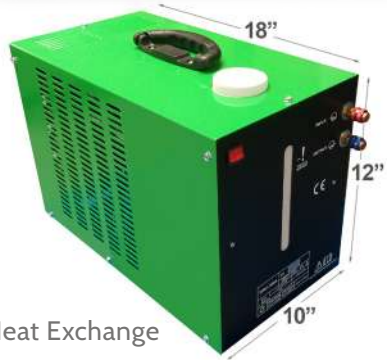

Heat Exchange

End View Of Conveyor

ULTRACURE® 1100	
Dimensions: Machine	54" (1371.6mm) W x 21" (533.4mm) H x 20" (508mm) D
Dimensions: Conveyor	8" (203.2mm) W x 3" (76.2mm) H x 41" (1041.4) L
Weight	117 lbs
Power	100-240 VAC, 50/60 Hz
Conveyor Speed Range	0.1" to 2.6" / second
Max Load Weight	30 lbs
UV Curing Window Area	6" (152.4mm) W x 3" (76.2mm) H x 6" (152.4mm) L
Diagram Dimensions	FRONT: 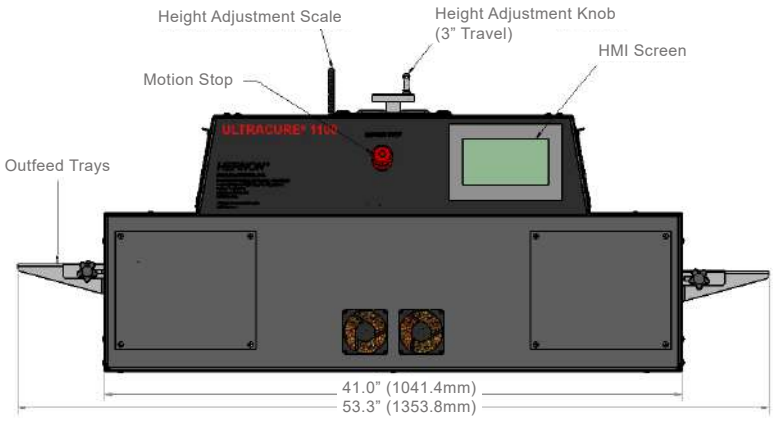 SIDE: 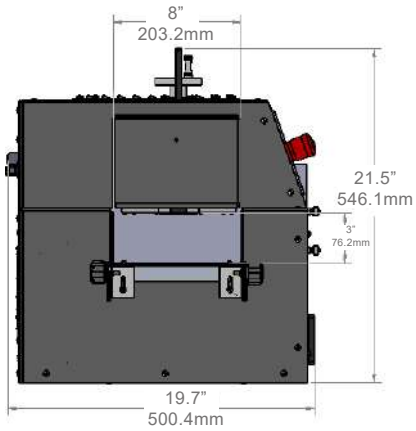

ULTRACURE® 1000

The **Ultraspot® 1000** is a high intensity, UV spot lamp which emits UV light from an optics wand and is used for the curing of adhesives, coatings and potting materials. The optics wand can be hand-held for complete mobility, clamped into position for repetitive operations or used in automated equipment.

Part #110-004

Features & Specs:

- 200 Watt, 300 WPI mercury UV cure lamp
- 256V, 50/60hz, 4 amp, one phase remote power supply
- Multi-modal: manual and timed modes
- Internal cooling fan
- Optional 5mm or 8mm wands (not included)

System Includes:

- Ultraspot® 1000 control box
- Footswitch
- UV safety glasses
- Power cord

	ULTRASPOT 1000
Dimensions (WxHxD)	12.375" (314mm) W x 7.625" (193.7mm) H x 13" (330.2mm) D
Weight	13.5 lbs
Power	90-265 VAC, 47-63Hz
Diagram Dimensions	FRONT: 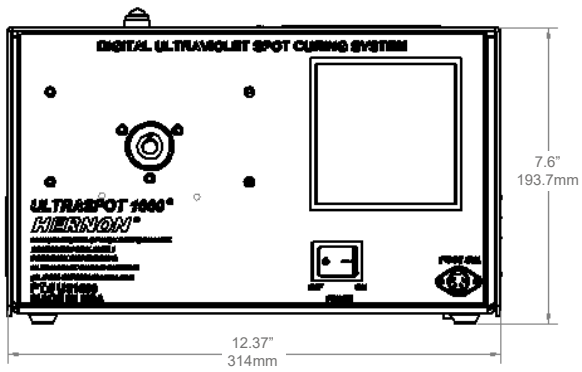 SIDE: 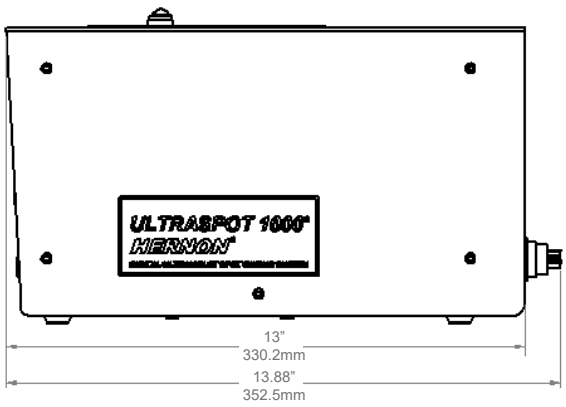

ULTRACURE® 6

The **Ultracure® 6** is a high output UV LED curing light designed to quickly and completely cure UV adhesives and sealants. This curing light has built in power regulation, high temperature protection and is fan cooled to ensure consistent long term operation while outputting a maximum intensity UV light. The Ultracure® 6 can be installed alone or in a series to produce a UV light bath across manufacturing conveyor belts.

Part #107-022

Features & Specs:

- Ultraviolet energy (UVE) cure
- Built in power regulation and overheat protection
- Green indicator light shows system is working properly
- Red indicator light indicates fault conditions
- Cooling fan
- I/O Port 5 pin CPD

Mounting:

The Ultracure® 6 has two mounting options. 4 x M3 x 0.5 on the electrical connector end and 4 x M2 x 0.4 on the bottom of the device.

ULTRA VIOLET ENERGY (U.V.E.) GRAPH

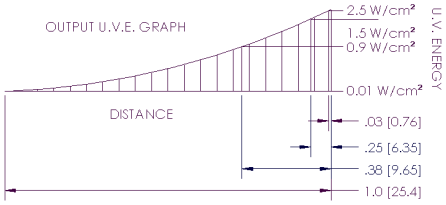

REF. ONLY - U.V. ENERGY

DISTANCE	ENERGY W/cm²
.03in [.76mm]	2.5
.25in [6.35mm]	1.5
.38in [9.65mm]	0.9
1.0in [25.4mm]	0.01

ENERGY IS INVERSELY PROPORTIONAL TO DISTANCE

ALL DIMENSIONS ARE IN inch [millimeter]

ULTRACURE® 6	
Dimensions (W x H x D)	6" (152.4mm) W x 2" (50.8m) D x 1.5" (38.1mm) H
Weight	0.55 lbs (0.25 kg)
Power Requirements	24 VDC, 700mA
UV Output	2.5 / W cm^2 (max) @ 365nm
Diagram & Mounting Options	BACK MOUNTING DIAGRAM: 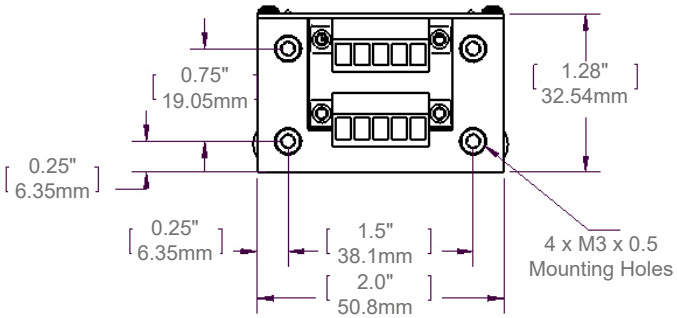 BOTTOM MOUNTING DIAGRAM: 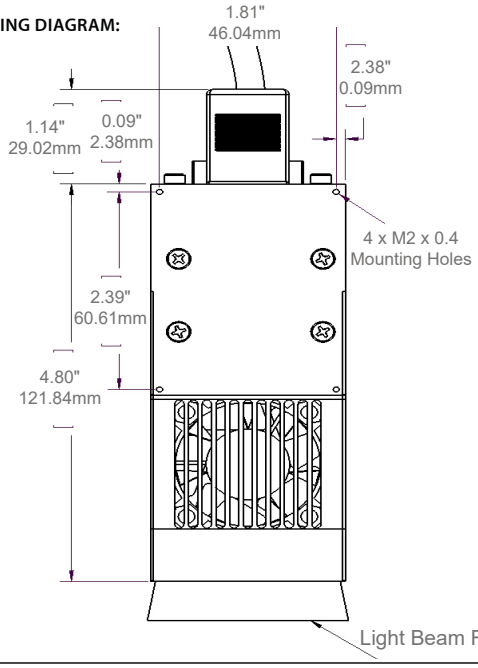

ULTRACURE® 7

The **Ultracure® 7** is a high output UV LED curing light with no intensity degradation over the LED lifecycle. Liquid cooled and intrinsically safe, the Ultracure® 7 boasts an impressive 17,000+ hours of useful life (or almost six years running eight hours a day). The Ultracure® 7 requires no replacement lamps or filters and can provide consistent high intensity UV light instantly with no warm up time required.

Water and dust proof to IP65 standards, the Ultracure® 7 is suited for a wide variety of manufacturing environments. This compact size ensures that positioning will not be a problem and multiple curing systems can be installed in tandem or stacked to get the desired effect.

Part #107-028

Features & Specs:
- Built in power regulation and overheat protection
- Green indicator light shows system is working properly
- Red indicator light indicates fault conditions
- 90° connector cable available

Mounting:
- 4 x M4 x 0.7 on electrical connector end
- 2 x M4 x 0.7 on both sides of the device

ULTRA VIOLET ENERGY (U.V.E.) GRAPH

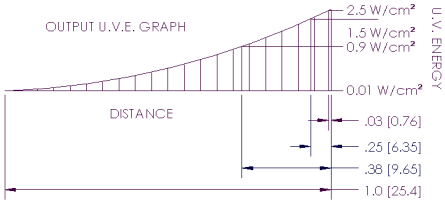

REF. ONLY - U.V. ENERGY

DISTANCE	ENERGY W/cm²
.03in [.76mm]	2.5
.25in [6.35mm]	1.5
.38in [9.65mm]	0.9
1.0in [25.4mm]	0.01

ENERGY IS INVERSELY PROPORTIONAL TO DISTANCE

ALL DIMENSIONS ARE IN inch [millimeter]

ULTRACURE® 7	
Dimensions (WxHxD)	2.1" (53.3mm) W x 1.25" (31.8mm) D x 1.5" (38.1mm) H
Power Requirements	24 VDC, 700mA
UV Output	2.5 / W cm² (max) @ 365nm
Diagram & Mounting Options	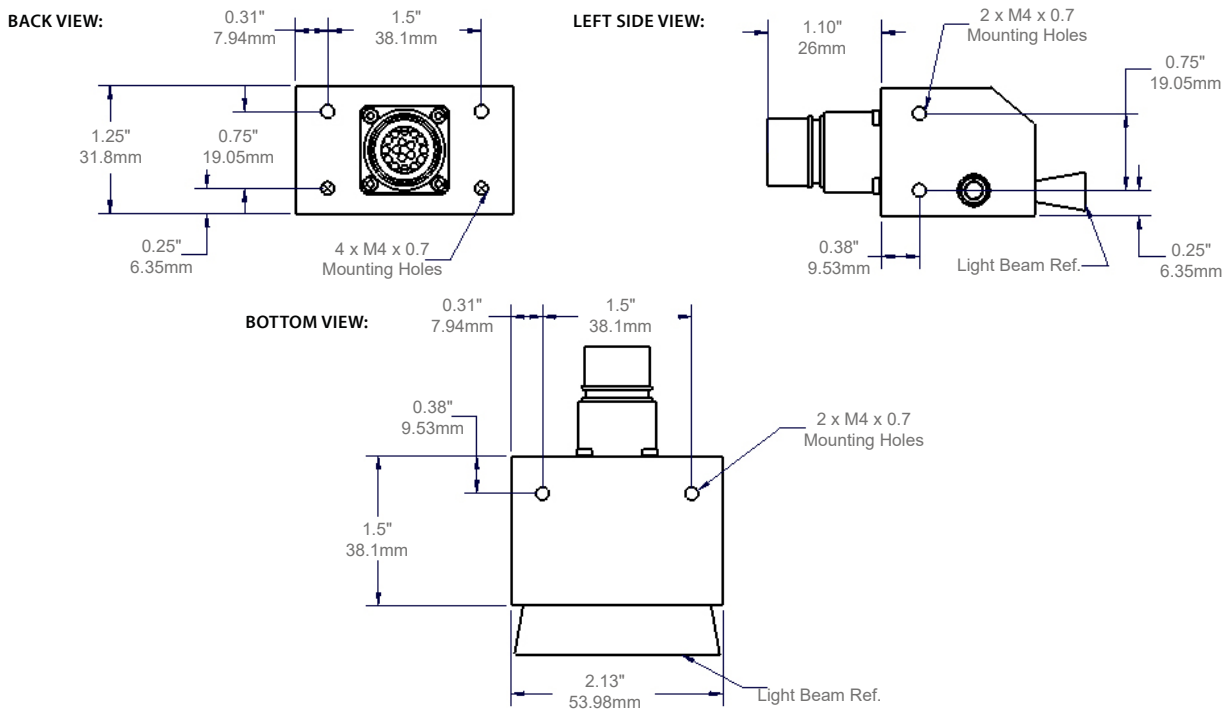

ULTRACURE® 8

The **Ultracure® 8** is a high output UV LED curing lamp designed to quickly and completely cure UV adhesives and sealants. This curing light has built-in power regulation, over temperature protection and is liquid cooled to ensure consistent long term operation while outputting a maximum intensity UV light. The Ultracure® 8 includes a focused lens that concentrates the ultraviolet light to provide an extended curing range of 3x the standard distance of an Ultracure® 6 while maintaining the light intensity needed to produce a curing reaction. The Ultracure® 8 can be installed alone or in a series to produce a UV light bath for UV curing applications.

Part #107-033

Features & Specs:

- Ultraviolet energy (UVE) cure
- Built in power regulation and overheat protection
- Green/red light status indicator system
- Liquid cooled
- I/O Port 5 pin CPD

Mounting:

The Ultracure® 8 has three mounting options. 4 x M4 x 0.7 on electrical connector end and 2 x M4 x 0.7 on each side of device.

ULTRA VIOLET ENERGY (U.V.E.) GRAPH

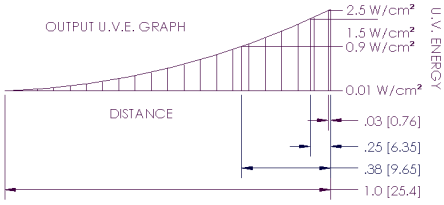

REF. ONLY - U.V. ENERGY

DISTANCE	ENERGY W/cm²
.03in [.76mm]	2.5
.25in [6.35mm]	1.5
.38in [9.65mm]	0.9
1.0in [25.4mm]	0.01

ENERGY IS INVERSELY PROPORTIONAL TO DISTANCE

ALL DIMENSIONS ARE IN inch [millimeter]

ULTRACURE® 8

Dimensions (W x H x D)	2.275" (57.79mm) W x 1.25" (31.75mm) D x 1.86" (47.2mm) H
Power Requirements	24 VDC, 700mA
UV Output	2.5 / W cm^2 (max) @ 365nm
Diagram & Mounting Options	

BACK MOUNTING DIAGRAM:

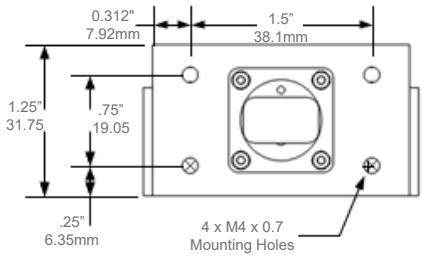

SIDE MOUNTING DIAGRAM:

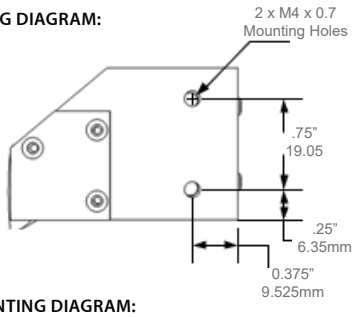

TOP MOUNTING DIAGRAM:

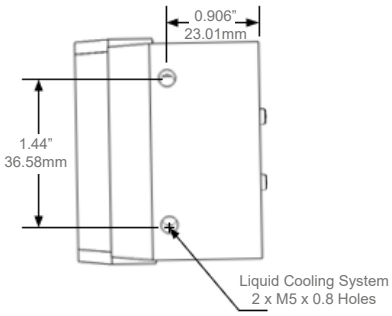

BOTTOM MOUNTING DIAGRAM:

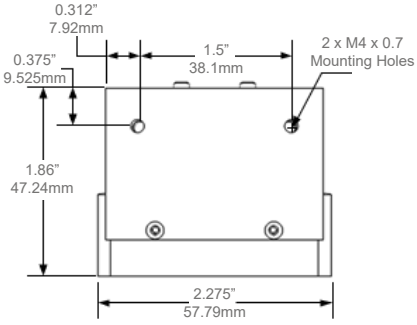

ULTRACURE® 9

The **Ultracure® 9** is a high output UV LED curing lamp designed to quickly and completely cure UV adhesives and sealants. This curing light has built-in power regulation, over temperature protection and is air cooled to ensure consistent long term operation while outputting a maximum intensity UV light. The Ultracure® 9 includes a focused lens that concentrates the ultraviolet light to provide an extended curing range of 3x the standard distance of an Ultracure® 6 while maintaining the light intensity needed to produce a curing reaction. The Ultracure® 9 can be installed alone or in a series to produce a UV light bath for UV curing applications.

Part #107-034

Features & Specs:

- Ultraviolet energy (UVE) cure
- Built in power regulation and overheat protection
- Green/red light status indicator system
- Cooling fan
- I/O Port 5 pin CPD

Mounting:

The Ultracure® 9 has two mounting options. 4 x M3 x 0.5 on electrical connector end and 4 x M2 x 0.4 on the bottom of the device.

ULTRA VIOLET ENERGY (U.V.E.) GRAPH

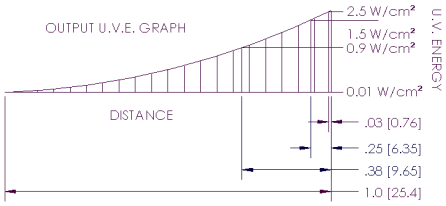

REF. ONLY - U.V. ENERGY

DISTANCE	ENERGY W/cm²
.03in [.76mm]	2.5
.25in [6.35mm]	1.5
.38in [9.65mm]	0.9
1.0in [25.4mm]	0.01

ENERGY IS INVERSELY PROPORTIONAL TO DISTANCE

ALL DIMENSIONS ARE IN inch [millimeter]

	ULTRACURE® 9
Dimensions (WxHxD)	2" W x 1.3" Deep x 6.2" H
Power Requirements	24 VDC, 700mA
UV Output	2.5 / W cm^2 (max) @ 365nm
Diagram & Mounting Options	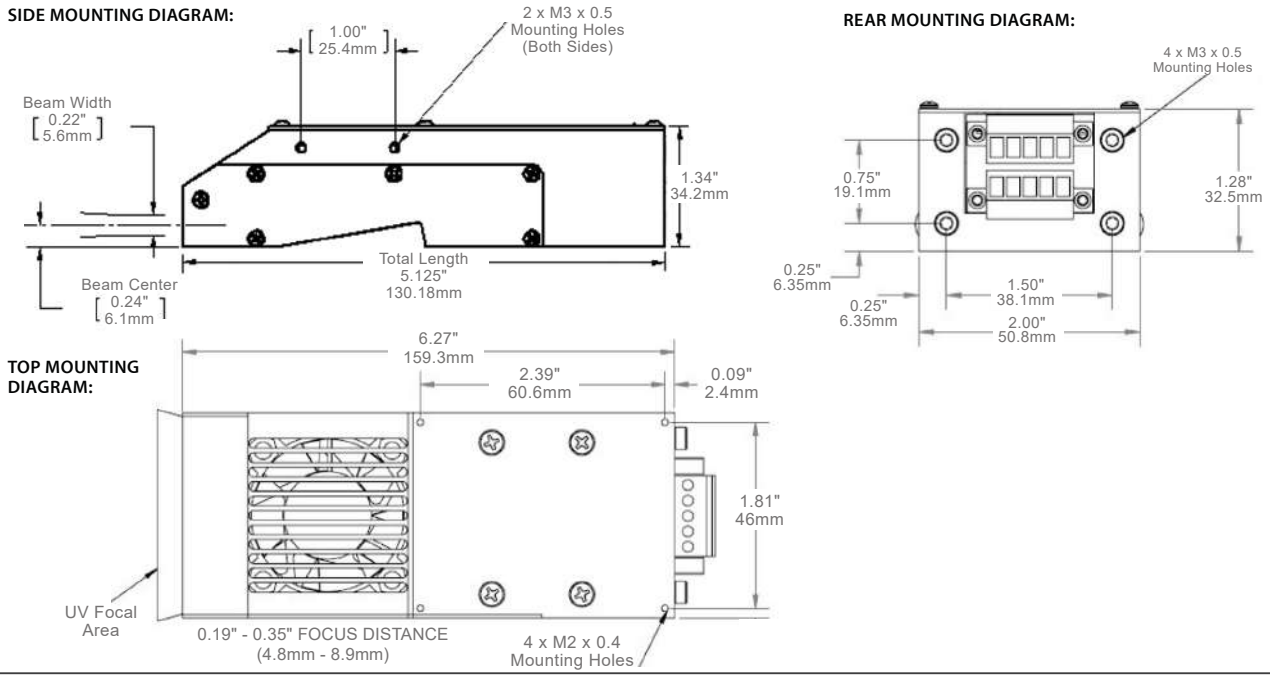

AUTOVATOR

Hernon® **Autovators** are designed to bulk feed ammunition into a collator or hopper. Using heavy duty welded buckets to transport parts, the elevator eliminates rigorous manual lifting and can safely move rounds from the built-in vibrating hopper up to its destination while preventing damage to parts in the process. Autovators can supply in excess of 240+ PPM (caliber dependent) at 10 buckets per minute. Can bulk feed a wide variety of parts including but not limited to projectiles, cartridges, live rounds and more.

Part #110020292

Features:
- Gently conveys parts to avoid possible damage
- Torque limiting motor allows for automatic jam shutdown
- Low power consumption
- User friendly color touchscreen HMI
- Configurable bucket levels
- Downstream bulk level sensor (Included w/ 3M cable)
- 3ft^3 hopper (with included 1.5ft^3 extension)

Replacement Part #'s:
» **102021415** - Drive motor
» **101020389** - Gate actuator
» **102021423** - Gate actuator sensor
» **101020337** - Hopper vibrator
» **105021236** - Bucket
» **102021206** - Bucket position sensor
» **105021267** - Linear bearings
» **101020390** - Oscillator actuator

»	AUTOVATOR
Dimensions (W x H x D)	25" x 80" x 59" (635 x 2032 x 1499mm)
Power Requirements	100-240V, 500VA
Operating Pressure	60psi
Max Input Air Pressure	100psi
Diagram	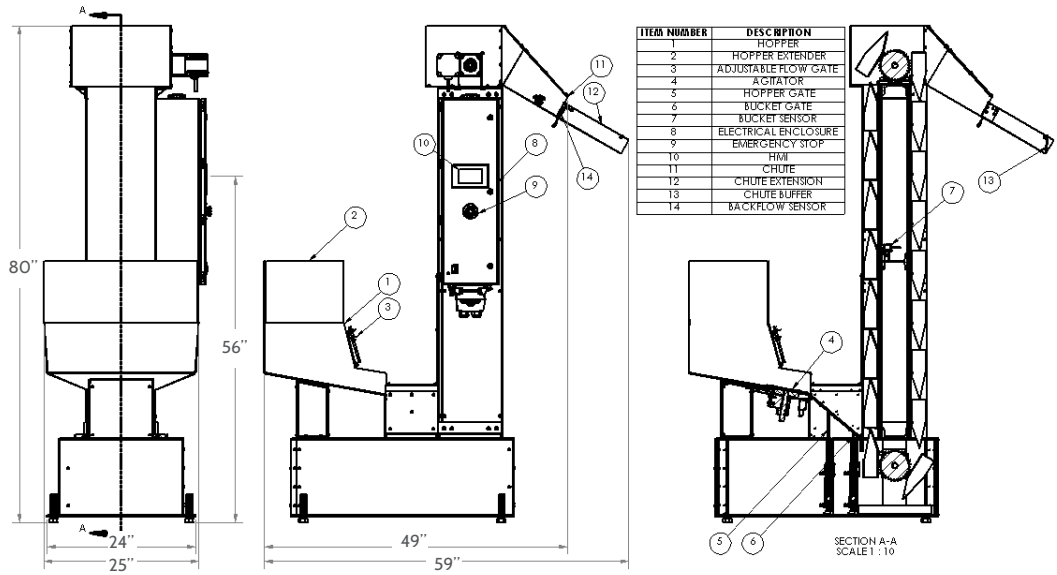

ITEM NUMBER	DESCRIPTION
1	HOPPER
2	HOPPER EXTENDER
3	ADJUSTABLE FLOW GATE
4	AGITATOR
5	HOPPER GATE
6	BUCKET GATE
7	BUCKET SENSOR
8	ELECTRICAL ENCLOSURE
9	EMERGENCY STOP
10	HMI
11	CHUTE
12	CHUTE EXTENSION
13	CHUTE BUFFER
14	BACKFLOW SENSOR

BOWL FEEDERS

Bowl Feeders automatically and continuously loads and orients large amounts of ammunition. Multiple calibers can be fed using the same base unit and they are capable of handling calibers ranging from 380ACP to 338 Lapua magnum. (Larger or smaller sizes possible upon request.) Counter clockwise rotating bowls and tooling are available.

Part #'s:
» **110020074** - 24" w/ Dunker Motor
» **110020240** - 24" w/ Teknic Motor
» **110020311** - 24" CCW w/ Dunker Motor
» **110020274** - 30" w/ Dunker Motor

24" Bowl

30" Bowl

Features:
- Zig zag sensors automatically detect low and high volume
- Interior mounted arms help keep rounds correctly oriented
- Sound reducing lid (not shown)
- Adjustable bowl angle
- Easy tooling changeover for sealing different calibers/cartridges
- Rear mounted removable powder release cover facilitates easy cleaning
- Output up to 240ppm (caliber dependent)
- Dunker motor options are IP65 rated
- 30" bowl is rated for 240ppm for rounds up to 7.62/.308/6.8; Slower speeds are necessary for larger rounds

»	BOWL FEEDERS
Dimensions (W x H x D)	24": 24" x 32" x 24" (609 x 813 x 32mm); 30": 30" x 33" x 30" (762 x 838 x 762mm)
Weight	80lbs (36.3kg)
Power Requirements	24V DC
Range of Parts	Calibers up to 339 Lapua Magnum
Diagram	**24" BOWL:** **30" BOWL:**

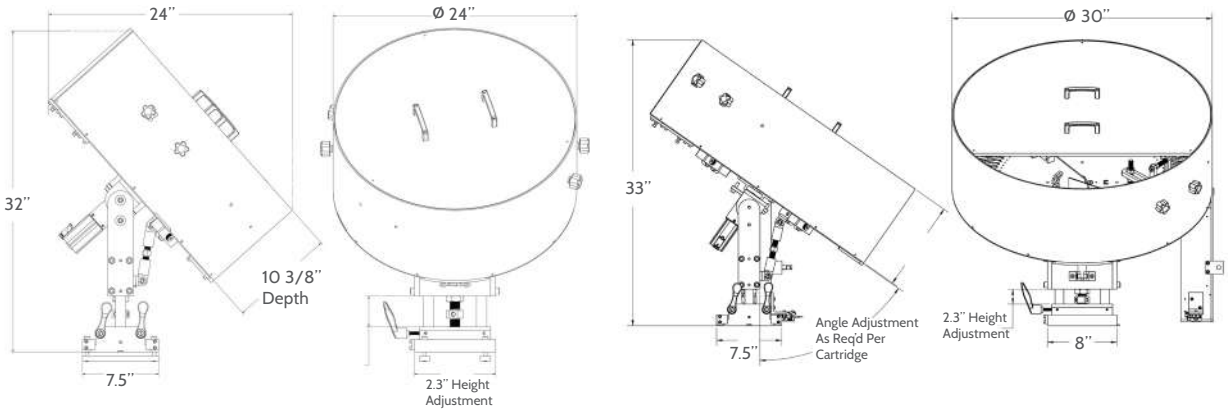

RESERVOIRS

Hernon® has designed and offers an array of reservoirs which come in a variety of sizes and with many dispensing tube fitting options to choose from. These durable reservoirs are ideal for adhesive, sealant, solvent or lubricant dispensing systems. They are uniquely and efficiently shaped to allow for consistent and smooth dispensing, quick changes/refills and are very easy to use.

Model:	R100	R125	R175	R185	R200
Part Number	106021872	110-100	110-045	110-109	110-102
Internal Dimensions	3.59" (91 mm) I.D. x 8.125" (206 mm) H	5.75" (146 mm) I.D. x 10" (254 mm) H	9" (228.6 mm) I.D. x 12" (304.8 mm) H	9" (228.6 mm) I.D. x 20.3" (515.6 mm) H	14" (355.6 mm) I.D. x 19.3" (490.2 mm) H
Internal Volume	0.35 Gallon (1.32 Liters)	1 Gallon (3.8 Liters)	3 Gallons (11.36 Liters)	5 Gallons (18.93 Liters)	10 Gallons (37.85 Liters)
Optional Low Level Sensor	None	Yes	Yes	Yes	Yes
Dispense Ports	1	2	2	2	1
Image					

RESERVOIR SELECTION REFERENCE GUIDE

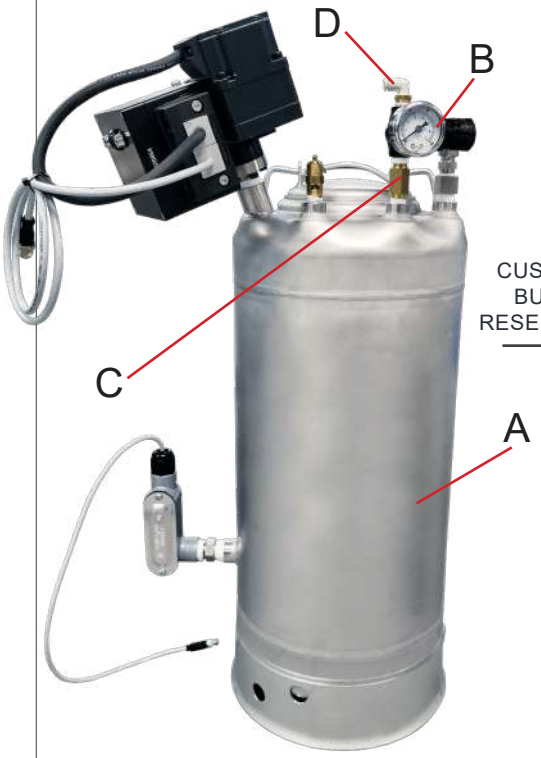

CUSTOM BUILT RESERVOIR

- (A) RESERVOIR
  - RESERVOIR R-100 (0.35 GALLON) **PT# 106021872**
  - RESERVOIR R-125 (1 GALLON) **PT# 110-100**
  - RESERVOIR R-175 (3 GALLON) **PT# 110-045**
  - RESERVOIR R-185 (5 GALLON) **PT# 110-109**
  - RESERVOIR R-200 (10 GALLON) **PT# 110-102**
- (B) REGULATOR
  - STANDARD REGULATOR & GAUGE (0-30 PSI) **PT# 110-080**
  - STANDARD REGULATOR & GAUGE (0-100 PSI) **PT# 110-081**
  - PRECISION REGULATOR & GAUGE (0-30 PSI) **PT# 110-090**
  - PRECISION REGULATOR & GAUGE (0-100 PSI) **PT# 110-091**
- (C) BULKHEAD TUBE FITTING
  - COMPRESSION TUBE FITTING 1/4" NPT (0.125 TUBE) QUANTITY 1 &/OR 2 **PT# 101-055**
  - COMPRESSION TUBE FITTING 1/4" NPT (0.250 TUBE) QUANTITY 1 &/OR 2 **PT# 101-052**
  - COMPRESSION TUBE FITTING 1/4" NPT (0.375 TUBE) QUANTITY 1 &/OR 2 **PT# 101-053**
- (D) TUBING OPTIONS
  - BLACK TUBING 1/8" NYLON **PT# 101-035**
  - BLACK TUBING 1/4" NYLON **PT# 101-036**
  - BLACK TUBING 1/4" TEFLON® **PT# 101-038**
  - CLEAR TUBING 1/4" TEFLON® **PT# 101-033**
  - CLEAR TUBING 3/8" TEFLON® **PT# 101-034**

HANDHELD/MANUAL DISPENSING GUNS

Hernon® offers multiple handheld dispensing guns. Several models are offered to support different dispensing cartridge sizes. The 2 part dispensing guns come with static mixing wands that mix the product by dispensing the two parts in equal proportions and combining both products in the wand. Our selection includes 300 ml and 400 ml pneumatic guns which allow the operator the speed and ease of automated dispensing while still having the control and custom use that handheld dispensers offer.

50 ml Dual Cartridge Dispense Gun

Part #Gun0001

- Manually operated dispensing gun for 50ml dual cartridge adhesives

400 ml Dual Cartridge Dispense Gun

Part #110-022

- Manually operated dispensing gun for 400 ml dual cartridge adhesives
- Capable of dispensing 2:1ratio

300 ml Cartridge Dispense Gun

Part #110-021

- Manually operated dispensing gun for 300ml dual cartridge adhesives

Pneumatic 400 ml Two Part Dispense Gun

Part #110-023

- Pneumatic operated dispensing gun for 400ml dual cartridges

DISPENSING NEEDLES, STATIC MIXERS, SYRINGES

General Purpose Precision Tips

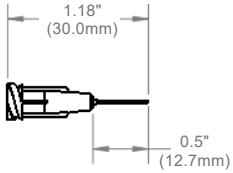

(20 pieces per pkg.) All ½" Stainless Steel

Gauge		Pt#	Inside Dia.	Color:	Image
14	●	**104-006**	1.55mm (.061")	Olive	
15	●	**104-007**	1.36mm (.053")	Amber	
16	●	**NDL07**	1.20mm (.047")	Violet	
18	•	**104-008**	.90mm (.035")	Green	
20	.	**104-009**	.62mm (.024")	Pink	
21	.	**104-010**	.51mm (.020")	Purple	
22	.	**104-011**	.41mm (.016")	Blue	
23	.	**104-012**	.33mm (.013")	Orange	
25	.	**104-013**	.25mm (.010")	Red	
27	.	**104-014**	.21mm (.008")	Clear	
30	.	**104-015**	.16mm (.006")	Lavender	

Tapered Tips

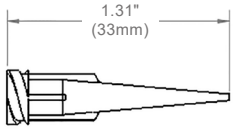

(20 pieces per pkg.) All ½" Stainless Steel

Gauge		Pt#	Inside Dia.	Color:	Image
14	●	**104-018**	1.55mm (.061")	Olive	
16	●	**104-019**	1.20mm (.047")	Grey	
18	•	**104-020**	.90mm (.035")	Green	
20	.	**104-021**	.62mm (.024")	Pink	
22	.	**104-022**	.41mm (.016")	Blue	
25	.	**104-023**	.25mm (.010")	Red	

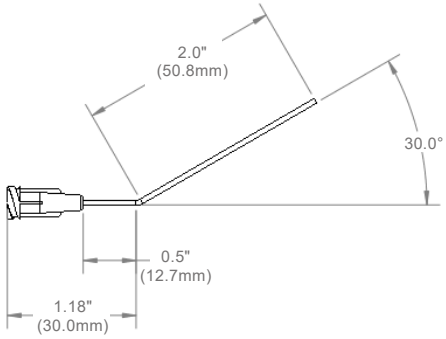

Rotocoater Needles

All 30°; 2.5" Stainless Steel; 5 needles per pkg.

Gauge		Pt#	Inside Dia.	Color:	Image
14	●	**104-039**	1.55mm (.061")	Green	
14	●	**104-040**	1.55mm (.061") Teflon® lined	Lt. Green	
15	●	**104-041**	1.36mm (.053")	Amber	
16	●	**104-042**	1.20mm (.047")	Violet	
18	•	**104-026**	.90mm (.035")	Olive	
21	.	**104-027**	.51mm (.020")	Purple	
23	.	**104-028**	.33mm (.013")	Orange	
	.	**104-043**	.41mm (.016")	Multi	

(Multi Includes one each: 14, 15, 16, 18, 21, 23)

Extras

Gauge	Pt#	Color	Image
Luer-Lock	**104-005**	Orange	

DISPENSING NEEDLES, STATIC MIXERS, SYRINGES

Extras

Gauge	Hernon® Pt#	Needle Inside Dia.	Color:	
14 (Rotocoater 45º)	**104-037**	1.55mm (.061")	Olive	
18 ● (Rotocoater 45º)	**104-036**	.90mm (.035")	Green	
Static Mixer (For•50ml dual component adhesives; 6" length / 6.3mm dia.)	**STATIC0001**			
Static Mixer (For 300ml & 400ml dual component adhesives; 9.25" length / 6mm dia.)	**STATIC0002**			
Static Mixer (Pinch-tubes for 400ml dual component adhesives - 11" length / 6mm dia.) Recommended for Autobonder® 2040;	**104-050**			
Syringe 30cc syringe with plunger - (Black version for UV material available) Recommended for Autobonder® 2101	**104-025**			
Dispensing Tip (4" white plastic dispensing tip)	**104-044**	N/A	White	
Dispensing Tip (2.5" white plastic dispensing tip)	**104-045**	N/A	White	